WINCO®

69kW - 165kW
PTO GENERATORS

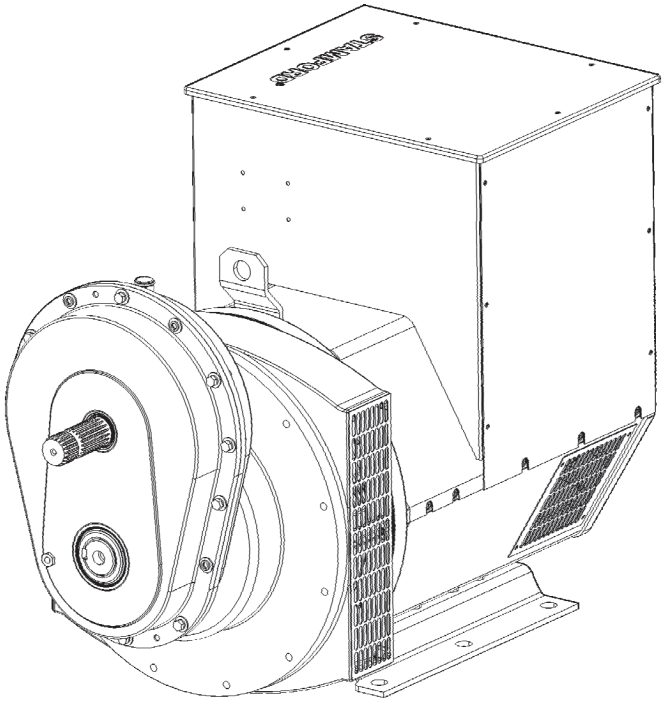

INSTALLATION AND OPERATORS MANUAL

WINCO INC. 225 S. CORDOVA AVE. LE CENTER, MN 56057 507-357-6821
SERVICE DEPT. 507-357-6831
www.wincogen.com

TABLE OF CONTENTS

SAVE THESE INSTRUCTIONS 2
INTRODUCTION 2
SAFETY 3
IMPORTANT SAFETY INSTRUCTIONS
ANSI SAFETY DEFINITIONS
CALIFORNIA PROPOSITION 65
SPECIFICATIONS 4
TESTING POLICY 6
PREPARING THE UNIT 6
UNPACKING
INSTALLATION 7
FOUNDATION MOUNTING
TRAILER MOUNTING
ELECTRICAL CONNECTIONS 8
OPERATION 9
PRE-START CHECKS 10
GENERATOR PROCEDURES 11
STARTUP 11
SHUTDOWN
MAINTENANCE 12
GENERAL
LUBRICATION
CLEANING & INSPECTING THE GENERATOR
GENERATOR STORAGE
TROUBLE SHOOTING TABLES 13
GENERATOR CONNECTIONS 14
GENERATOR RECEPTACLE PANELS 16
36 MONTH LIMITED WARRANTY 20

COPY YOUR MODEL AND SERIAL NUMBER HERE
No other WINCO generator has the same serial number as yours. If you should ever need to contact us on this unit, it will help us to respond to your needs faster.

MODEL _____

SERIAL NUMBER _____

PURCHASE DATE _____

DEALER NAME _____

DEALER PHONE # _____

SAVE THESE INSTRUCTIONS

This manual contains important instructions that should be followed during installation and maintenance of the generator. Read and understand all instructions in the manual before starting and operating the generator.

USING THIS MANUAL
Congratulations on your choice of a WINCO generator. You have selected a high-quality, precision-engineered generator designed and tested to give you years of satisfactory service.

To get the best performance from your new generator, it is important that you carefully read and follow the operating instructions in this manual.

Should you experience a problem please follow the “Troubleshooting Tables” near the end of this manual. The warranty listed in the manual describes what you can expect from WINCO should you need service assistance in the future.

INTRODUCTION

The WINCO rotating field power take-off generators will provide, depending on the unit purchased, 120/240V single phase, 120/240V three phase, 120/208 three phase or 277/480 three phase 60Hz electrical service when direct-driven. Tractor or vehicle power take-off shafts, can be used for driving these generators.

NOTE: The prime mover which drives the generator must be capable of delivering approximately 2 HP per 1000 watts output from the generator. Observe input RPM specifications.

This generator includes an Automatic Voltage Regulator (AVR) which maintains a constant voltage output and a Frequency meter to insure the unit is producing 60 Hz power. All the models (except the 480 volt units) have a control panel with two output power receptacles, and overload protection circuit breakers, and most models are equipped with a full load disconnect plug (not applicable on the 135, 145 and 150 kW models) To reduce maintenance problems, the coupling between the generator input shaft and rotor consists of precision helical gearing. The input shaft is 1-3/4 in diameter 20 spline .

The factory thoroughly tests each of these generators before shipment. All are continuous duty rated.

IMPORTANT:
THE MANUFACTURER STRONGLY RECOMMENDS RUNNING THE GENERATOR UNDER LOAD AT LEAST ONCE A MONTH IN ORDER TO EVAPORATE ANY ACCUMULATED MOISTURE CONDENSATION AND TO KEEP THE UNIT IN GOOD WORKING ORDER.

SAFETY

IMPORTANT SAFETY INSTRUCTIONS

SAVE THESE INSTRUCTIONS

This manual contains important information that should be understood and followed before the installation, operation and maintenance of the generator. Failure to follow the safety instructions in this manual could result in serious injury or death. Keep this manual available for future reference.

ANSI SAFETY DEFINITIONS

DANGER:
*DANGER indicates an imminently hazardous situation which, if not avoided, **will** result in death or serious injury. This signal word is to be limited to the most extreme situations.*

WARNING:
*WARNING indicates a potentially hazardous situation which, if not avoided, **could** result in death or serious injury.*

CAUTION:
*CAUTION indicates a potentially hazardous situation which, if not avoided, **may** result in minor or moderate injury. It may be used to alert against unsafe practices.*

NOTE: CAUTION is also used on the unit labels and in this manual to indicate a situation that could result in serious damage or destruction of the equipment and possible personal injury.

1. ELECTRIC SHOCK -

The output voltage present in this equipment can cause a fatal electric shock. This equipment must be operated by a responsible person.

A. Do not allow anyone to operate the generator without proper instruction.
B. Guard against electric shock.
C. Avoid contact with live terminals or receptacles.
D. Use extreme care if operating this unit in rain or snow.
E. Use only three-prong grounded plugs and extension cords.
F. Be sure the unit is properly grounded to an external ground rod driven into the earth.

2. FIRE HAZARD -

A. Keep a fire extinguisher nearby and know its proper use. Fire extinguishers rated ABC by NFPA are appropriate.

3. NOISE HAZARD -

Excessive noise is not only tiring, but continual exposure can lead to loss of hearing.

A. Use hearing protection when working around this equipment for long periods of time.
B. Keep your neighbors in mind when permanently installing this equipment.

4. CLEANLINESS -

Keep the generator and surrounding area clean.

A. Remove all grease, ice, snow or materials that create slippery conditions around the unit.
B. Remove any rags or other materials that could create a potential fire hazard.
C. Carefully clean up any gas or oil spills before starting the unit.

5. SERVICING EQUIPMENT -

All service, including the installation or replacement of service parts, **should be performed only by a qualified technician.**

A. Use only factory approved repair parts.
B. Do not work on this equipment fatigued.
C. Use extreme caution when working on electrical components. High output voltages from this equipment can cause serious injury or death.
D. Installing a generator is not a “do-it-yourself” project. Consult a qualified, licensed electrician or contractor. The installation must comply with all national, state, and local codes.

6. **INSTALLATION -**

Installing a PTO generator is not a “do-it-yourself” project. Consult a qualified, licensed electrician or contractor. The installation must comply with all national, state, and local codes.

A. Never operate the PTO drive generator without having it properly mounted to a concrete base or approved trailer.
b. Never connect the PTO generator to an existing electrical system without installing an isolation transfer switch.
C. Always insure the drive shaft is straight and level before operating the generator.

8. OPERATION - PTO drive shafts (tumbling bars) have many inherent dangers, extreme caution must be exercised when using them.

A. NEVER allow children around the drive shaft when it is in operation.
B. Keep all safety guards and shields in place and securely tightened.
C. Never operate a drive shaft that has been damaged or had the safety shield removed.
D. Never step over a drive shaft while it is running.
E. Never wear a necktie, loose articles of clothing, or anything else that can be caught in moving parts.
F. Never try to stop drive shaft with your hand or your foot.

CALIFORNIA PROPOSITION 65

WARNING: *This product contains crude oil, gasoline, diesel fuel and other petroleum products, Antifreeze to which can expose you to chemicals including toluene and benzene, Ethylene glycol (ingested) which are known to the State of California to cause cancer, birth defects or other reproductive harm and developmental issues.*
For more information go to www.P65Warning.ca.gov.

SPECIFICATIONS

W70PTO-3

Watts	69,000
Phase	Single
Voltage	120/240
Power Factor	1.0
Amps	287
Input Speed	540 RPM
Generator Speed	1800 RPM
Input Shaft	1 3/4” - 20 spline
Required Tractor PTO HP	138

W70PTOS-3

Watts	69,000
Phase	Single
Voltage	120/240
Power Factor	1.0
Amps	287
Input Speed	1000 RPM
Generator Speed	1800 RPM
Input Shaft	1 3/4” - 20 spline
Required Tractor PTO HP	138

W75PTOS-4

Watts	78,000
Phase	Three
Voltage	120/208
Power Factor	1.0
Amps	217
Input Speed	1000 RPM
Generator Speed	1800 RPM
Input Shaft	1 3/4” - 20 spline
Required Tractor PTO HP	156

W75PTOS-17

Watts	78,000
Phase	Three
Voltage	120/240
Power Factor	1.0
Amps	188
Input Speed	1000 RPM
Generator Speed	1800 RPM
Input Shaft	1 3/4” - 20 spline
Required Tractor PTO HP	156

W85PTOS-3

Watts	85,000
Phase	Single
Voltage	120/240
Power Factor	1.0
Amps	354
Input Speed	1000 RPM
Generator Speed	1800 RPM
Input Shaft	1 3/4” - 20 spline
Required Tractor PTO HP	170

W85PTOS-18

Watts	85,000
Phase	Three
Voltage	277/480
Power Factor	1.0
Amps	102
Input Speed	1000 RPM
Generator Speed	1800 RPM
Input Shaft	1 3/4” - 20 spline
Required Tractor PTO HP	170

W100PTOS-3

Watts	100,000
Phase	Single
Voltage	120/240
Power Factor	1.0
Amps	416
Input Speed	1000 RPM
Generator Speed	1800 RPM
Input Shaft	1 3/4” - 20 spline
Required Tractor PTO HP	200

W105PTOS-4

Watts	105,000
Phase	Three
Voltage	120/208
Power Factor	1.0
Amps	291
Input Speed	1000 RPM
Generator Speed	1800 RPM
Input Shaft	1 3/4” - 20 spline
Required Tractor PTO HP	210

W105PTOS-17

Watts	105,000
Phase	Three
Voltage	120/240
Power Factor	1.0
Amps	253
Input Speed	1000 RPM
Generator Speed	1800 RPM
Input Shaft	1 3/4” - 20 spline
Required Tractor PTO HP	210

W120PTOS-18

Watts	120,000
Phase	Three
Voltage	277/480
Power Factor	1.0
Amps	145
Input Speed	1000 RPM
Generator Speed	1800 RPM
Input Shaft	1 3/4” - 20 spline
Required Tractor PTO HP	240

W145PTOS-4

Watts	145,000
Phase	Three
Voltage	120/208
Power Factor	1.0
Amps	403
Input Speed	1000 RPM
Generator Speed	1800 RPM
Input Shaft	1 3/4” - 20 spline
Required Tractor PTO HP	290

W145PTOS-17

Watts	145,000
Phase	Three
Voltage	120/240
Power Factor	1.0
Amps	349
Input Speed	1000 RPM
Generator Speed	1800 RPM
Input Shaft	1 3/4” - 20 spline
Required Tractor PTO HP	290

W150PTOS-3

Watts	150,000
Phase	Single
Voltage	120/240
Power Factor	1.0
Amps	625
Input Speed	1000 RPM
Generator Speed	1800 RPM
Input Shaft	1 3/4” - 20 spline
Required Tractor PTO HP	300

W165PTOS-18

Watts	155,000
Phase	Three
Voltage	277/480
Power Factor	1.0
Amps	187
Input Speed	1000 RPM
Generator Speed	1800 RPM
Input Shaft	1 3/4” - 20 spline
Required Tractor PTO HP	290

TESTING POLICY

Before any generator is shipped from the factory, it is fully checked for performance. The generator is loaded to its full capacity, and the voltage, current, and frequency are carefully checked.

Rated output of generator is based on engineering tests of typical units, and is subject to, and limited by, the temperature, altitude, fuel, and other conditions specified by the manufacturer of applicable engines.

PREPARING THE UNIT

UNPACKING

CAUTION: EQUIPMENT DAMAGE
When you unpack your new generator, be sure to remove all of the information sheets and manual from the carton.

1. As you receive your unit, it is critical to check it for any damage. If any damage is noted, it is always easiest to refuse the shipment and let WINCO take care of the freight claim. If you sign for the unit, the transfer of the ownership requires that you file the freight claim

2. Before proceeding with the preparations of your new generator for operation, take a couple of minutes to ensure the unit you have received is the correct model and review the specification pages in this manual to ensure that this unit meets your job requirements.

INSTALLATION

FOUNDATION MOUNTING

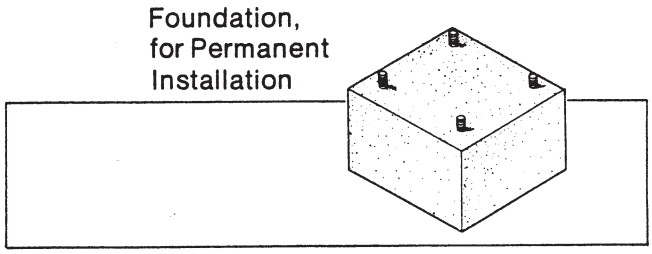

Mount the generator on a foundation if it is to be used as a permanent or standby power source. When planning a foundation, consider the following points:

A. The foundation location should enable aligning the drive shaft (tumbling bar) in a straight or nearly-straight line between the power take-off and the generator input shaft. Misalignment must be less than 15 degrees during generator operation, even though the mechanical design of the tumbling bar may allow greater misalignment.

B. The foundation must be solid enough to absorb generator starting and reflected load torque during operation.

C. The foundation surface should be flat.

D. Space is required around the generator for mounting switching devices, making connections, and for servicing.

E. For dimensions needed for install for your specific generator, please refer to it's outline drawing. The hardware needed is dependent on your distinct application.

F. All four generator mounting pads must rest firmly on the foundation. Install shims if necessary to even out the foundation under the mounting pads, then bolt the generator firmly in place.

TRAILER MOUNTING

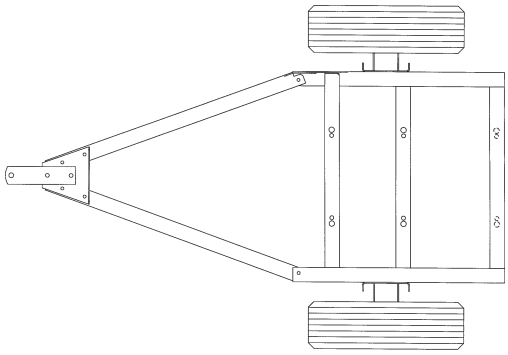

Mount the generator on a trailer if you plan to use it as a portable power source. When selecting or building a trailer to mount the generator, consider the following points:

A. The trailer construction must be strong enough to support the generator.

B. The design of the trailer must enable the trailer to remain stable during operation, and to resist tipping caused by generator starting and reflected load torque.

WARNING: PERSONAL INJURY & EQUIPMENT DAMAGE
Trailer may tip over and cause injuries if wheels are not spaced far enough apart.

C. The trailer height and mounting position of the generator on the trailer should enable aligning the drive shaft (tumbling bar) in a straight or nearly straight line between the power take-off and generator input shafts. Misalignment must be less than 15 degrees during generator operation, even though the mechanical design of the tumbling bar would allow greater misalignment.

D. The generator mounting area of the trailer bed should be flat. All four generator mounting pads must rest firmly on the trailer bed. Install shims if necessary to even out the bed under the mounting pads, then bolt the generator firmly in place.

ELECTRICAL CONNECTIONS

CAUTION:
Only qualified electricians should install electric wiring. Wringing must conform to all applicable national, state, and local codes. (Reference: National Fire Protection Association Manual No. 70, National Electrical Code.)

DANGER: PERSONAL INJURY
If the generator is to be used as a standby power source, a special disconnect switch must be installed to separate the generator and the commercial power lines. The disconnect must isolate the generator from the commercial power lines and the load when the generator is on standby, and must isolate the commercial power lines from the load and generator when the generator is supplying power.
A properly rated and installed double throw manual power isolation transfer switch must be used with a standby generator. The transfer switch isolates the load from the power line and allows you to safely operate your loads without endangering the power line repair crew. See previous diagrams

The load, connected to the normal terminals of the transfer switch, is energized by the normal power line when the switch is in the normal position. The generator, connected to the emergency terminals of the switch, furnishes power when the switch is in the emergency mode position.

There are two ways to install a manual transfer switch. The first is to install the switch between the watt-hour meter and the normal distribution panel. As with any system you must install an entrance rated breaker before the manual transfer switch. The manual transfer switch must in all cases be equal to or greater than the rating of the entrance rated breaker.

The second way to install the system is to purchase and install an emergency distribution panel and move the circuits you wish to back up to the new distribution panel. In this case the manual transfer switch only has to be sized to the amperage of the circuit breaker in the main distribution panel that is feeding it.

Before deciding which system to install, first determine which loads you can safely run on your PTO generator and the cost of buying a large manual transfer switch versus the cost of a smaller switch and the additional distribution panel.

The only assembly work required after unpacking the generator is to assemble the load disconnect plug, which is contained in a bag in the sub-pack carton packed in the generator crate. **NOTE - The 145kW and 150kW units do not ship with disconnect plugs and must be hard wired to the main line circuit breaker.**

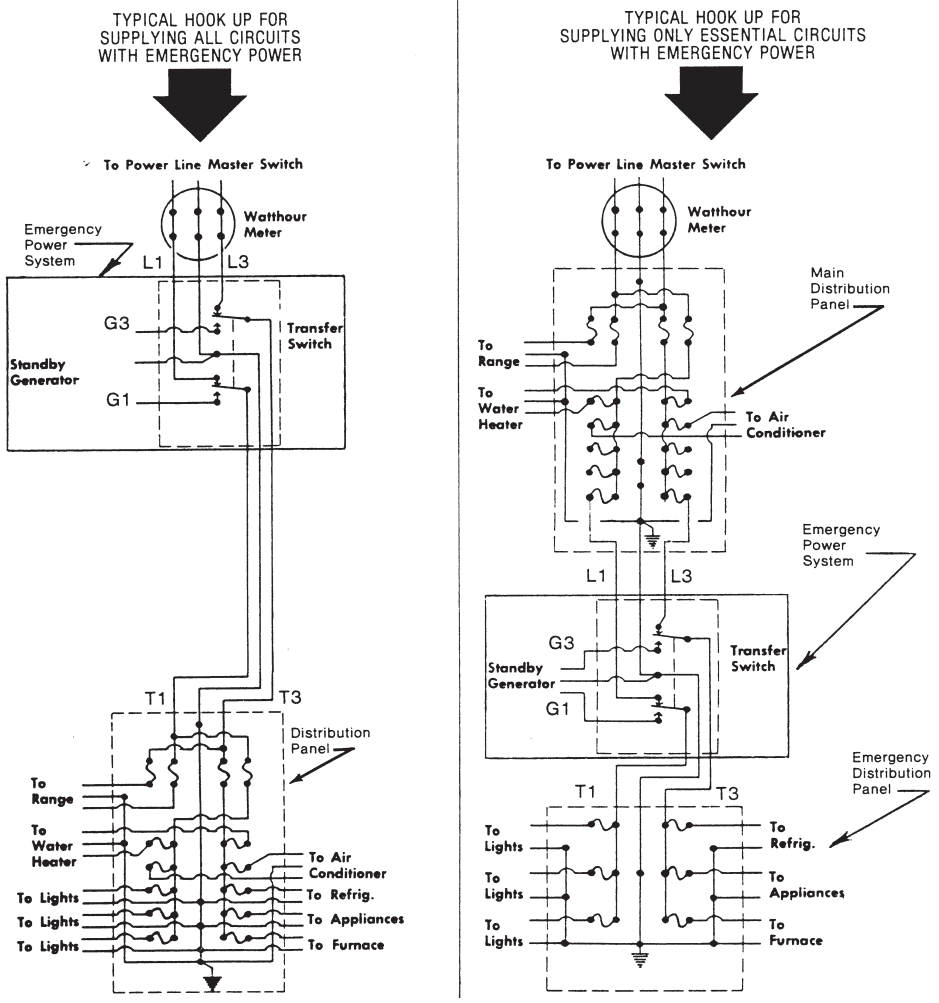

Typical Connection Methods for Generator Power Service

The bag contains an instruction sheet, 2 plug bodies, four contacts, a handle and the hardware to assembly the disconnect plug. You will need to purchase the appropriate length of fine stranded copper wire for your application in order to complete the assembly of the disconnect plug.

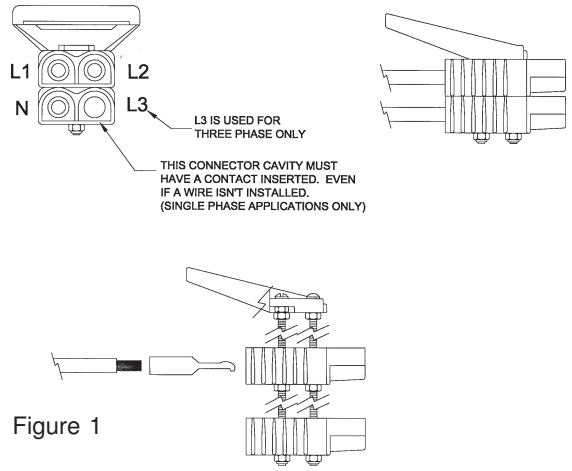

Figure 1

The following wire sizes are recommended for each unit.

Model	AWG	Insulation
W70PTOS	4/0	Neoprene/THHN
W75PTOS	4/0	Neoprene/THHN
W85PTOS	4/0	Neoprene/THHN
W100PTOS	4/0	Neoprene/THHN
W105PTOS	4/0	Neoprene/THHN
W120PTOS	1/0	THHN
W145PTOS	300MCM	THHN NO Plug Provided
W150PTOS	500MCM	THHN NO Plug Provided
W165PTOS	1/0	THHN

WARNING: EQUIPMENT DAMAGE
Never use acid core solder. When soldering insure no excess solder runs down on the contact surface - Solder on the contact surface will not allow the contacts to mate properly causing them to burn up.

Each wire should be stripped back 7/8 of an inch and inserted into one of the contacts in the plug kit. You will then either need to solder them together using a good grade of resin core solder or they can be crimped with an appropriate compression crimper or both.

Approved crimping tools are:
1. Anderson Power Products
2. ETC Model HHS hydraulic crimper
3. ITT Blackburn No. 1640
4. Thomas & Betts #TBM5

To complete the assembly of the disconnect plug refer to the instruction sheet of the plug kit.

WARNING: ELECTRICAL SHOCK
During the next step, the load disconnect plug should not be plugged into its receptacle. Also, make sure that the equipment to which the plug leads (cables) are being connected is not energized (live).

Strip the insulation off of the free end of each of the plug leads (cables) and connect them to the load transfer switch or directly to the load.

OPERATION

Before using the generator, read and understand the following information.

Generator output current (amperage) is internally limited by three circuit breakers. If too much demand is placed on a generator output (if you try to drive too many motors with it, for example), one of the circuit breakers will trip, cutting off the output in order to protect the generator.

A 15 Amp push-to-reset circuit breaker protects the 120V duplex receptacle output circuit. 15 Amps is the total limit for both outputs of the duplex receptacle. (Not available on the 480V three phase generators).

A 50 Amp push-to-reset circuit breaker protects the 240V receptacle output circuit. (Not available on the 480V three phase generators).

A large two pole (three pole for three phase) switch type main circuit breaker protects the generator windings and output circuits, including the load disconnect receptacle. On the W145PTOS and the W150PTOS, you will connect your power output leads directly to the mainline circuit breaker.

To aid in determining how much load can be applied to the generator, and how it should be distributed among the generator output receptacles, the following formulas may be useful. Get load voltages, current, and wattage from the nameplates on the equipment in the load.

Load current (in Amps) x Load voltage = Load wattage
Amps x Volts = Watts
Watt/1000 = kW

Load wattage / Load wattage = Load current (in Amps)

Example: 250W, 120V floodlight load: 250W / 120V = 2 Amps (parrots.)

NOTE: Electric motors require more current to start than to run. Commonly, the current rating given on a motor nameplate is the full load (running) current required by the motor, not its starting current, which is a lot higher. Motor starting current requirements vary greatly, by motor size and type. Repulsion-induction type motors are the easiest to start, typically using 1 1/2 to 2 1/2 times as much current to start as to run; capacitor type motors usually require 2 to 4 times as much current to start as to run; split-phase type motors are the hardest to start, normally using 5 to 7 times as much current to start as to run.

PRE-START CHECKS

WARNING: PERSONAL INJURY:
When working on or around these generators, do NOT wear loose fitting clothing or any articles that may get caught in moving parts.

1. Visually inspect the generator. Check for:
   a. Correct mounting.
   b. Physical damage.
   c. Debris in cooling vents and screens. (Could cause generator to overheat)

IMPORTANT:
The manufacturer recommends that, if the generator has been stored for any length of time, before using it, the operator remove the control box cover and cooling fan screen, then inspect the generator for rodent nests or other objects that could cause generator binding and/or overheating. See 'Cleaning' portion of the Maintenance section.

2. Check Gearcase oil level. Case should be filled with oil to plug marked 'OIL LEVEL'. Fill or remove oil as required.

NOTE: Either too little or too much oil can harm the equipment. See 'Lubrication" portion of Maintenance for oil specifications.

3. Make sure the drive shaft (tumbling bar) is assembled with its universal joint knuckles "synchronized," as illustrated below. If knuckles are not synchronized, the bar will chatter when rotating, which will cause the generator output voltage to flicker. Drive shafts shipped new from Winco are always synchronized and tethered so they can not be taken apart.

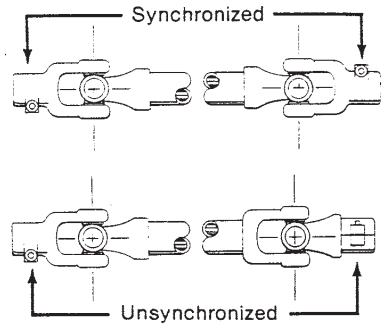

DANGER: PERSONAL INJURY:
Power take-off must be disengaged at this time.

4. Couple the tractor to the generator with the drive shaft (tumbling bar). Couple the tumbling bar to the generator input shaft first, then to the power take-off shaft. Check alignment, tractor, power take-off shaft (tumbling bar), and generator input shaft should form a straight (or nearly straight) line, with less than 5° misalignment between the shafts. Misalignment will cause generator output voltage to flicker.

WARNING: PERSONAL INJURY:
Make sure that all tumbling bar lock pins are engaged and that all safety shields are in place before operating the PTO generator.

5. Make sure no binding exists in generator or gear box. If binding is found, locate the cause and correct it before proceeding.

6. Make sure that the electrical loads to be driven by the generator will not draw more current than the ratings of the generator receptacle or cord set which will supply the current.

7. Check all electrical connections in the system to be energized by the generator. Make sure the connections are correct and are tight.

8. Make sure all loads are turned off. Do not start the generator under load.

GENERATOR PROCEDURES

STARTUP

1. With the power take-off drive disengaged, start the engine, which will drive the generator. Run the engine long enough to warm it up before proceeding so that it will run smoothly and achieve full power under generator load.

2. With engine idling, engage the power take-off drive.

3. Watch the frequency meter on the generator and slowly increase engine speed until frequency reaches approximately 60 Hz. The voltage output of the generator is controlled by an Automatic Voltage Regulator (AVR). Before turning on any load, check your voltage output from the generator using a Volt/OHM meter. If the voltage is either high or low, adjust the voltage level by turning the voltage adjustment screw on the AVR. The AVR is located inside the generator control cabinet. Once the proper voltage level is set, the AVR should bring the voltage back to the same levl each time the unit is started up. But, as a precaution, it should be checked each time you use the generator. As a quick check you can plug in a troublelight and check for normal brightness.

4. With engine and generator running smoothly, switch on the electrical load while watching the frequency meter.

NOTE: EQUIPMENT DAMAGE
If the load includes motors, turn them on one at a time, highest starting current motor first, next highest second, etc.

Adjust engine throttle to keep generator output under load at 60Hz. If the engine is equipped with a governor, it may automatically adjust the throttle as the load changes and keep the generator output at the proper level. However, some governors are not sensitive enough to maintain proper output under changing loads, and in such cases, the frequency will have to be monitored closely and manually adjusted.

SHUTDOWN

WARNING: PERSONAL INJURY
Never try to stop the generator. Alway let it coast until it stops.

1. Switch off electrical load.

2. Reduce Speed of engine driving generator to idle.

3. Disengage power take-off drive, and allow generator to coast to a stop.

4. Shut off the engine.

5. Disconnect the drive shaft (tumbling bar) power take-off end first, then the generator end.

MAINTENANCE

CAUTION: EQUIPMENT DAMAGE
Most electrical equipment in North America operates satisfactorily at frequencies between 59 and 61 Hz (cycles per second).Operating the generator at frequencies outside that range may cause damage to the generator and/or to electrical equipment driven by the generator.

GENERAL

Routine preventative maintenance minimizes costly repairs and generator downtime. Before each use, inspect the generator: gear case oil level should be correct, cooling vents and screens should be clear, and generator mounting hardware should be tight. Clean and inspect the generator after storing it for long periods, and after using it in extremely dusty conditions or in severe weather, such as rain or blowing snow.

LUBRICATION

The generator bearings are factory lubricated and sealed, and require no further lubrication.

The splined generator input shaft should be cleaned and lubricated with thin film of grease before and after each use of the generator.

The drive shaft (tumbling bar) requires greasing. Keep the universal joints in the coupling shaft free from grease and dirt buildup.

NOTE:
Do not over lubricate the universal joints.

See illustration below for recommended lubrication schedule for the coupling shaft.

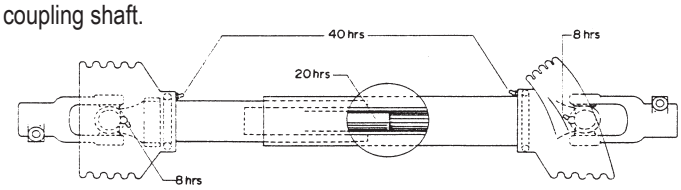

Check the generator gear case oil level before each use of the generator. Maintain the oil level at oil level plug height. The generator is shipped with lubricant in the gearcase. Specifications for the gearcase lubricant are:

API Service: GL-5
Grade: SAE 85W-90-140
Amount: 2.75 Pint

CAUTION: EQUIPMENT DAMAGE
Do not overfill generator gearcase. Overfilling causes overheating and oil seal failure.

Change the oil at least once every six months. Change it more often if you use the generator in bad weather. Use the following procedure to change the generator gearcase oil.

1. Remove gearcase breather. Soak breather in cleaning solvent, then allow to dry.

2. Remove oil level plug. See illustration below.

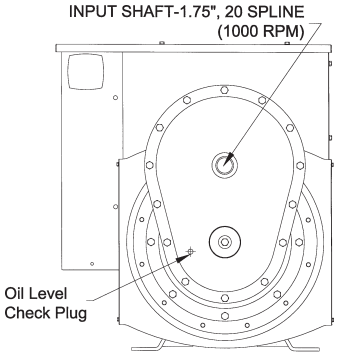

3. Remove the oil drain plug, drain the oil into a clean oil resistant container, 1 quart or larger. Check the oil for metal. Fine metal dust in the oil does not indicate trouble, but metal chips do. Dismantle the gearcase and look for damaged gears if you find metal chips in the oil.

4. Replace the oil drain plug. Refill the gearcase through the breather port with new oil of the recommended type. Fill the case up to the oil level check plug height. About 1 pint.

5. Replace the oil level check plug.

6. Replace the breather.

CLEANING & INSPECTING THE GENERATOR

Use a vacuum cleaner or dry low pressure compressed air (regulated at 25-35PSI) to clean the generator periodically.

WARNING: EQUIPMENT DAMAGE
Do NOT clean the generator while it is running.

Proceed as follows:
1. Remove ventilated control box cover. Vacuum or blow vents and screen clear of dust or debris. Wash them down with cleaning solvent if necessary.
2. Remove cooling fan shroud. Vacuum or blow dust from screen and fan blades. Wipe them off with cleaning solvent if necessary.
3. Vacuum or blow dust and other debris from inside generator and control box.
4. With the panel cover removed, inspect the wiring for correct routing, fraying insulation, and secure connections.
5. Replace panel cover and cooling fan shroud.

GENERATOR STORAGE

Before storing the generator, apply a heavy coat of grease to the splined input shaft. Store the generator in a sheltered area, where it is protected against snow, rain, and excessive dust.

TROUBLE SHOOTING TABLES

SYMPTOM	CAUSE(S)	CORRECTIVE ACTION
No output voltage	1. Circuit breaker open 2. Defective frequency meter 3. Short circuit in the load 4. Defective receptacles 5. Loose (or broken) wires or connections in control box 6. Defective rotating rectifier 7. Defective AVR 8. Shorted or open rotor 9. Shorted or open stator	1. Reset circuit breakers, replace if defective 2. Check output with another meter, replace meter if defective. 3. Disconnect the load. Check voltage at receptacle cord set. Check motors, appliances, and load leads for short circuit. Repair short. 4. Remove panel cover and check for voltage to the receptacles. Replace defective receptacles. 5. Remove panel cover and check all wiring and connections. Tighten and/or repair where necessary. 6. Test rectifier. Replace if defective. 7. Repair or replace as required. 8. Measure rotor resistance. Replace rotor if open or shorted. 9. Measure between leads for open r short. Replaces stator if defective.
High voltage	1. Defective or misadjusted AVR	1. Adjust, repair, or replace as required
Low voltage	1. Engine speed too low 2. Generator overloaded 3. Inadequate engine horsepower. 4. Defective or misadjusted AVR	1. Check engine speed. Increase RPM if necessary. 2. Reduce load if it is higher than the rated capacity of the generator. (see generator nameplate) 3. Generator requires 2 HP/1000 watt output. Obtain larger engine if necessary. 4. Repair, adjust, or replace as required.
Output voltage flickering or fluctuation	1. Tumbling bar (shaft) misalignment 2. Engine governor may be worn or improperly adjusted. Set or repair defective governor. 3. Loose connection in field circuit 4. Tumbling bar U-Joints not synchronized	1. Reduce tumbling bar misalignment to less than 15 degrees 2. Engine governor may be worn or improperly adjusted. Set or repair defective governor. 3. Check and tighten connections. 4. Reassemble tumbling bar.
Excessive vibration	1. Power take-off misalignment excessive 2. Loose mounting nuts and bolts or hold down studs 3. Universal joints in coupling shaft worn or dry. 4. Defective bearings	1. Correct misalignment. It should be less than 15 degrees. 2. Tighten mounting buts and bolts; repair hold down stud mountings. 3. Repair or replace defective parts. 4. Check for possible causes. Replace defective bearings.
Generator overheating	1. Poor ventilation 2. Generator overloaded 3. Shorted turns in field or stator windings.	1. Clean ventilation and cooling fan screens. 2. Reduce load, then check voltage and current. 3. Replace defective components.
Oil Leak	1. Loose plug in gearcase 2. Defective seal, gasket, or plug in geargase	1. Tighten plug. 2. Replace seal(s), gaskets or plugs. Maintain correct oil level.

GENERATOR CONNECTIONS

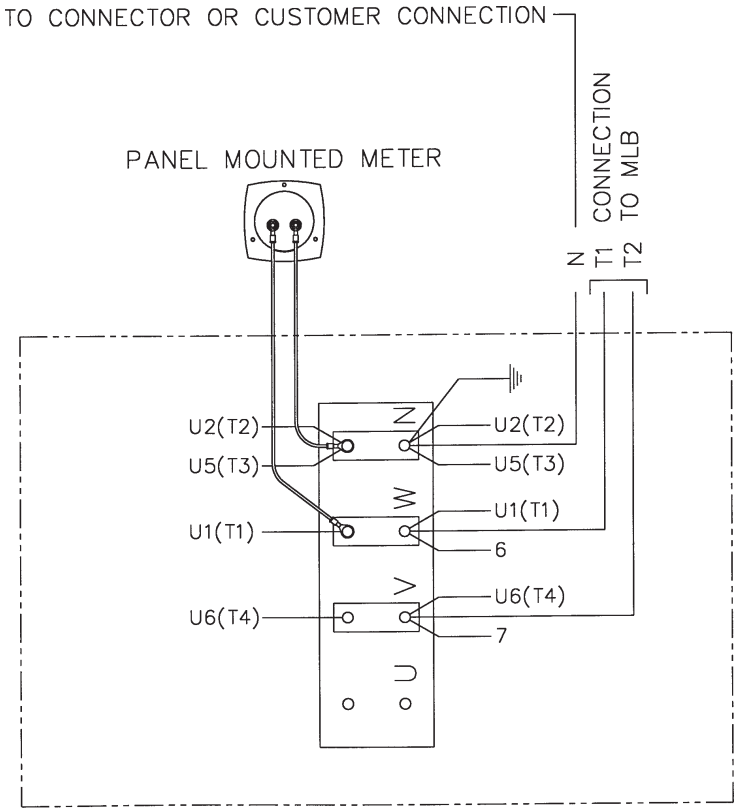

120/240V
SINGLE PHASE

120/240V
THREE PHASE

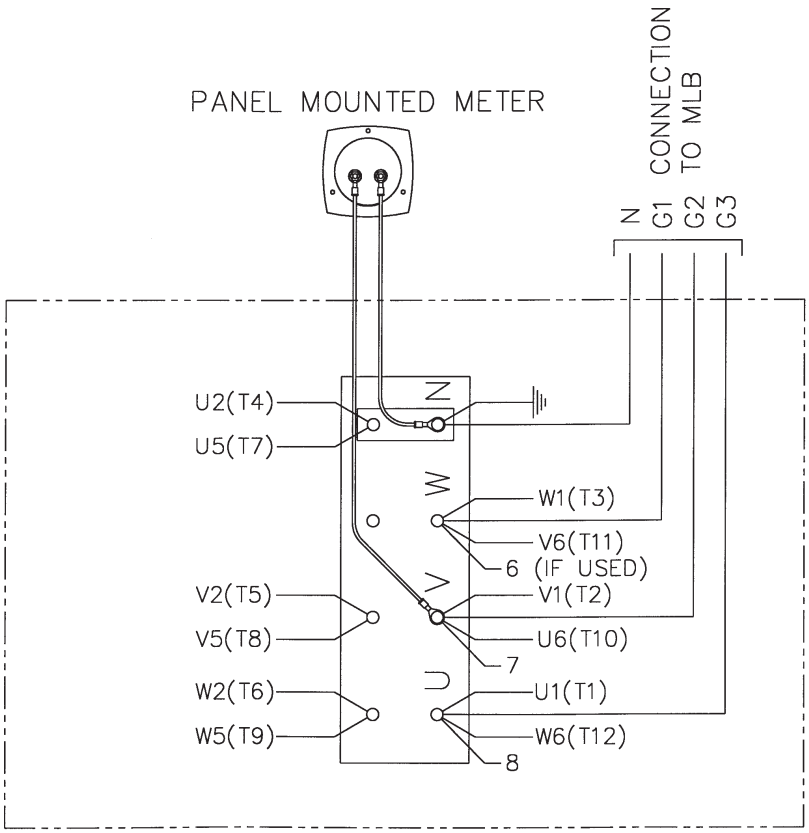

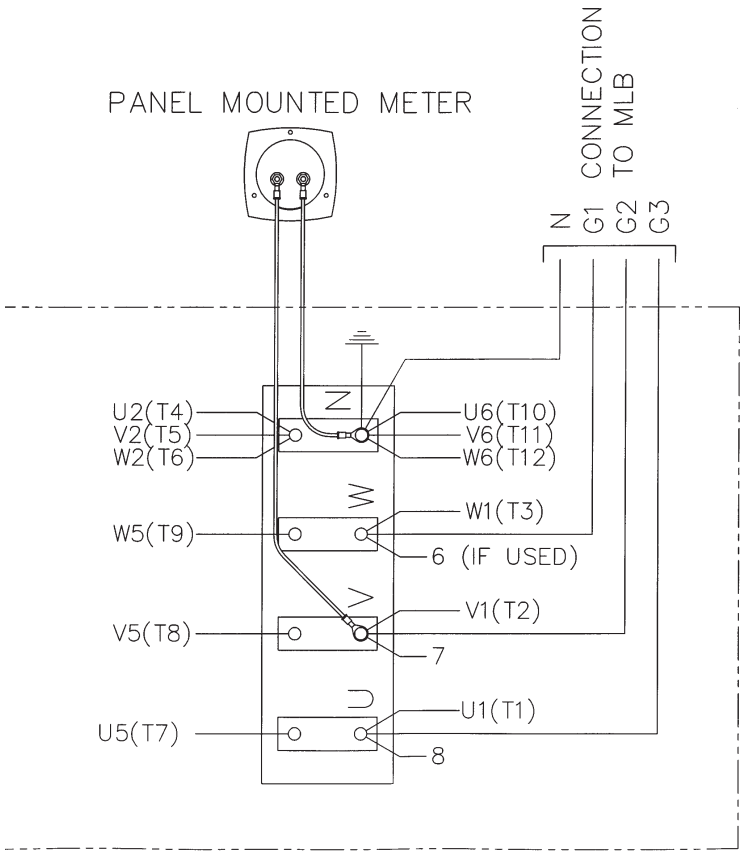

120/208V
THREE PHASE

277/480V
THREE PHASE

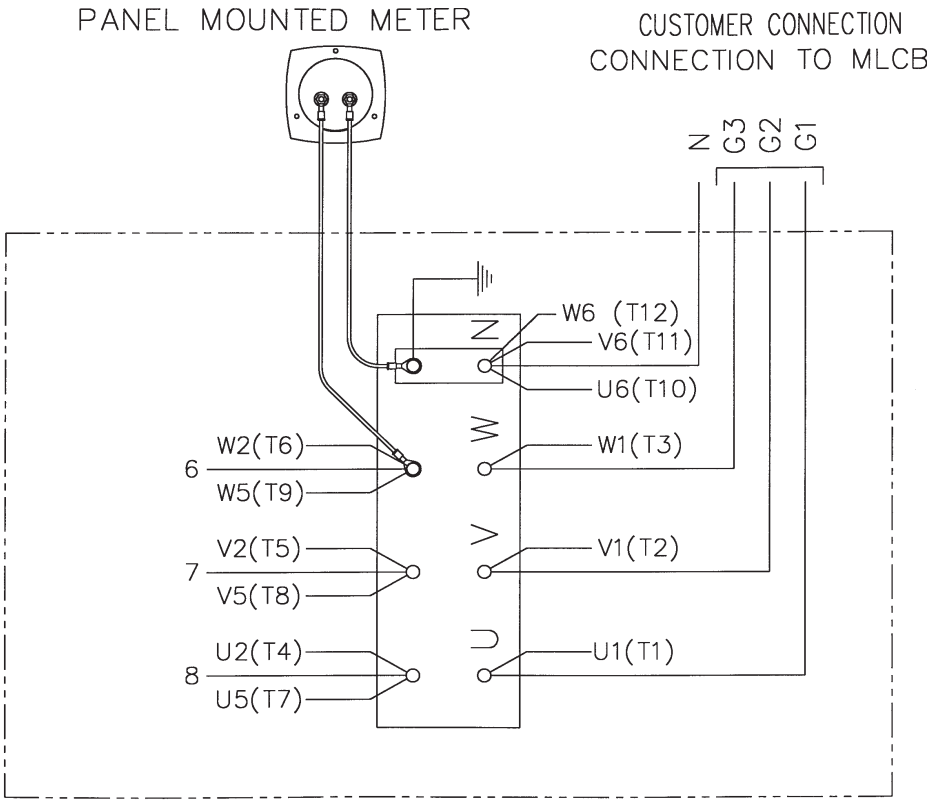

GENERATOR RECEPTACLE PANELS

W70PTO-3
W70PTOS-3

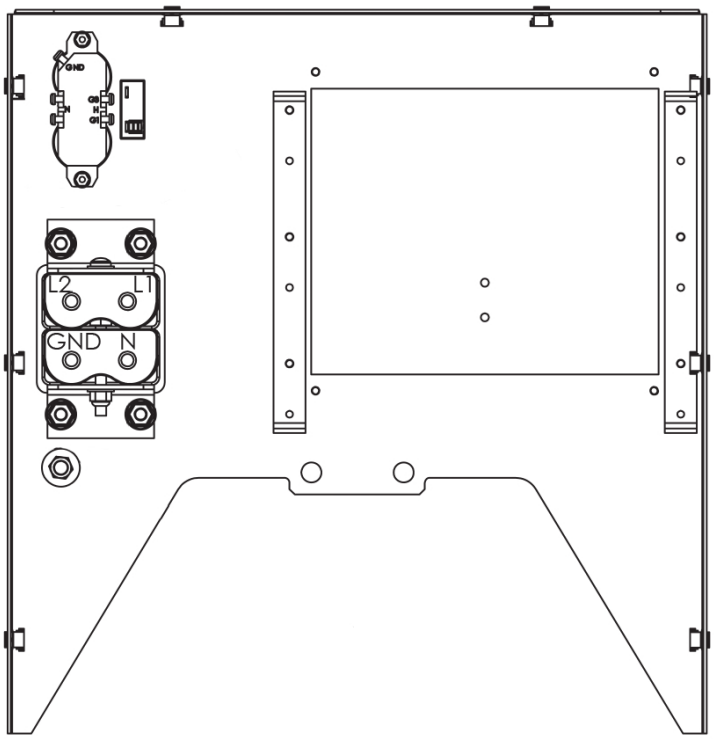

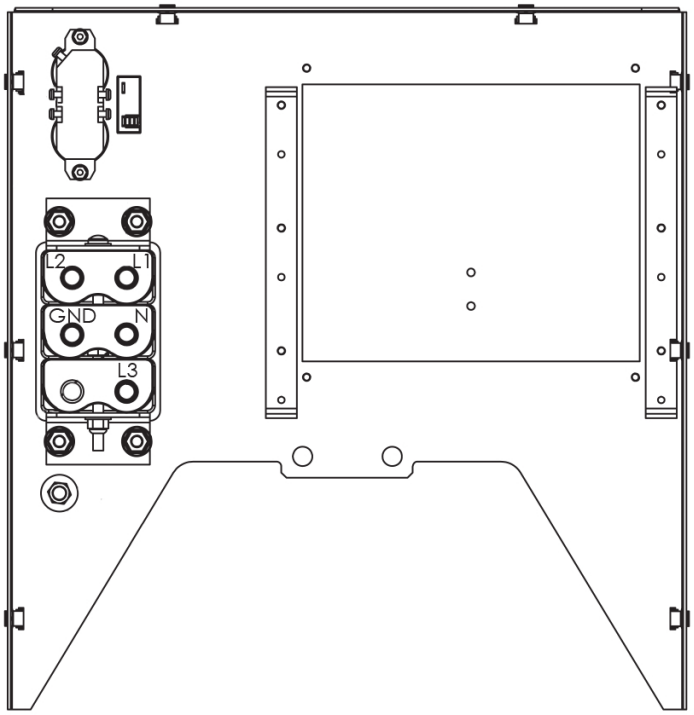

W75PTOS-4
W75PTOS-17

W85PTOS-18

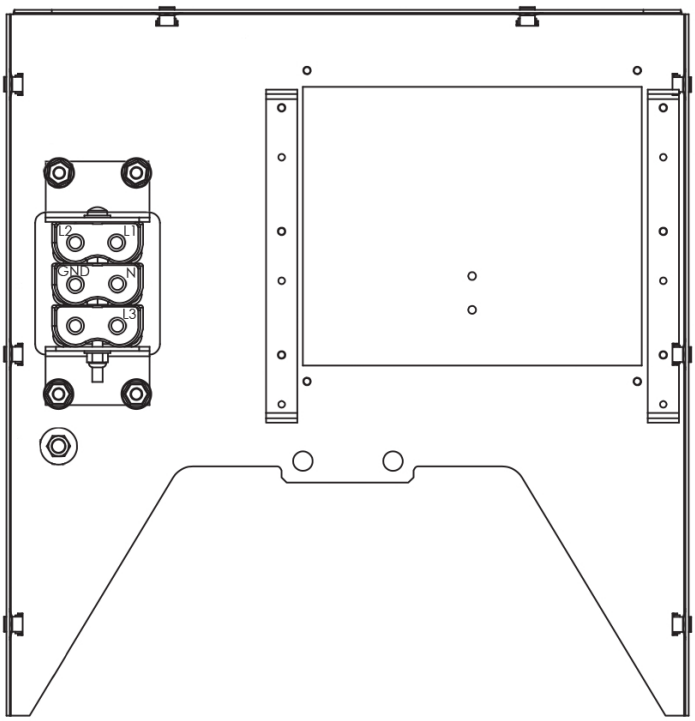

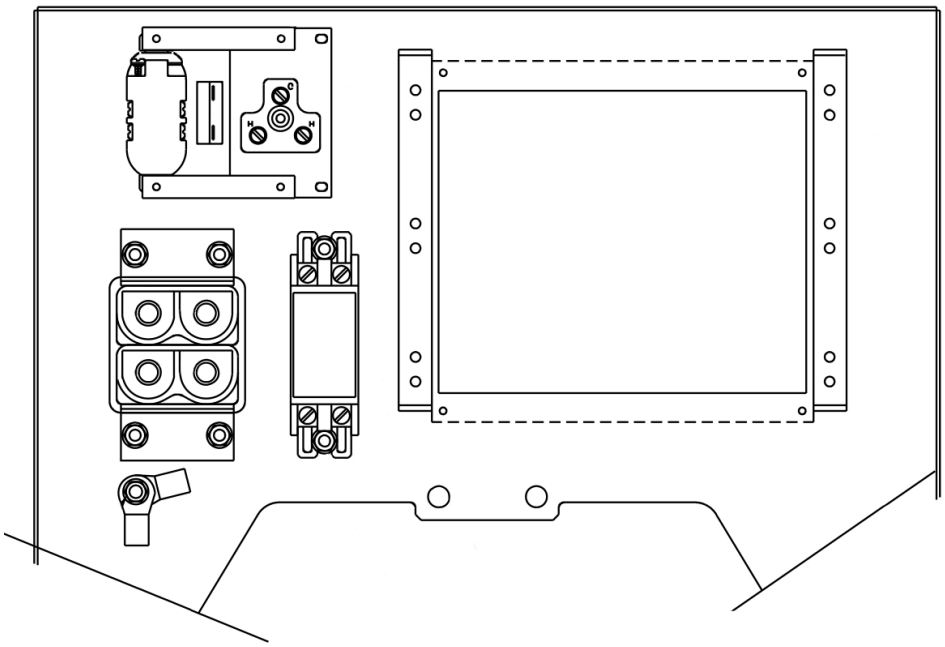

W85PTOS-3
W100PTOS-3

W105PTOS-4
W105PTOS-17

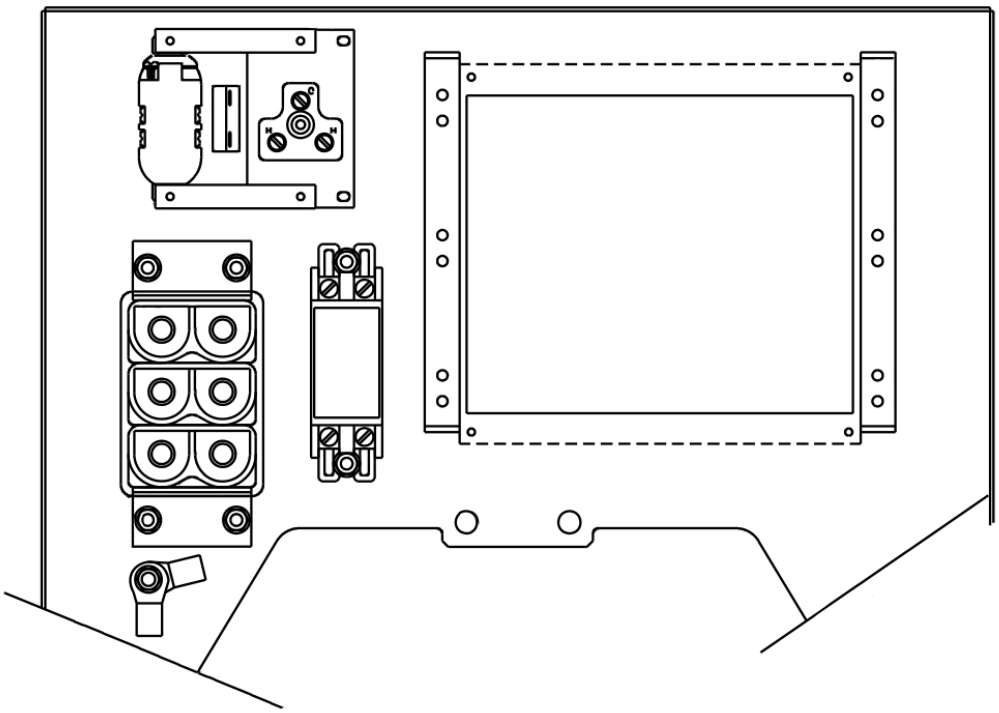

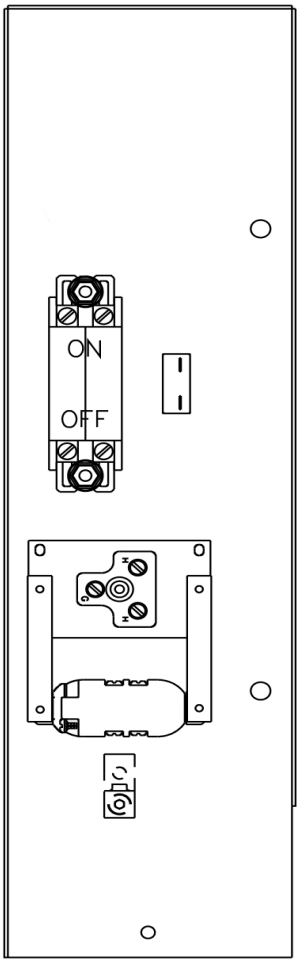

W145PTOS-4
W145PTOS-17
W150PTOS-3

W120PTOS-18
W165PTOS-18

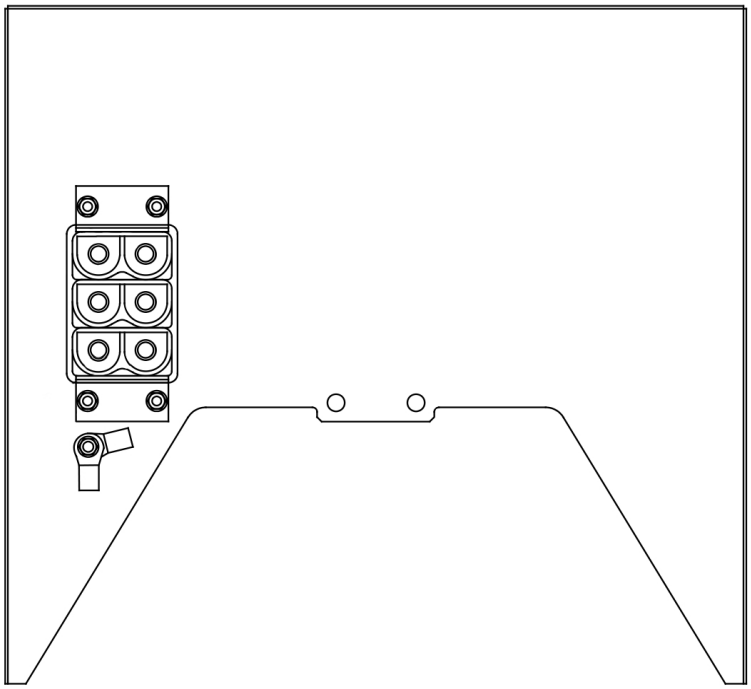

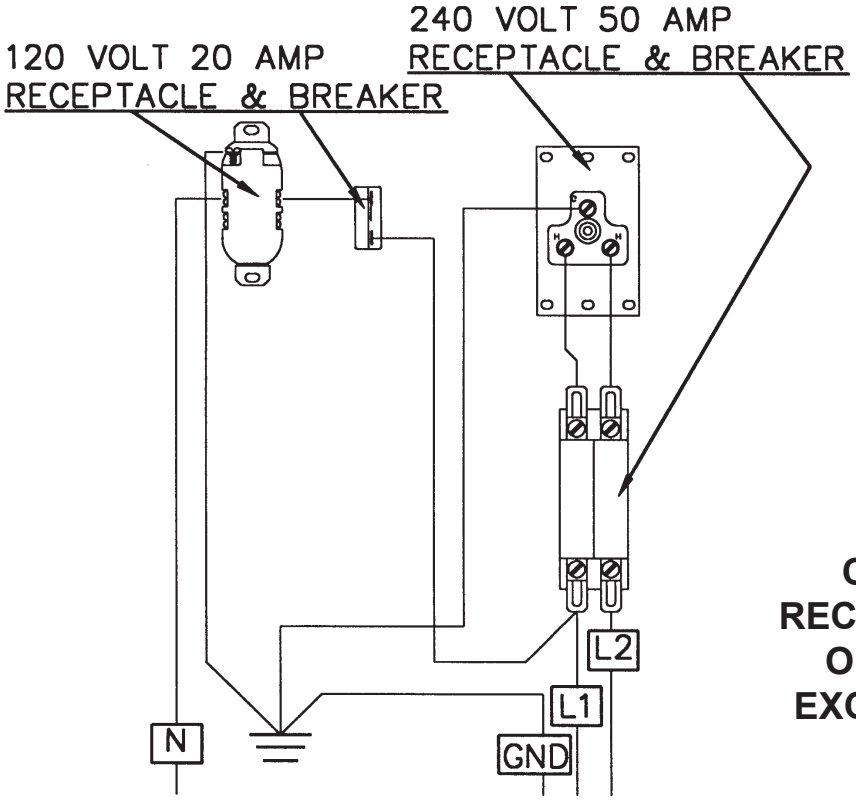

GENERATOR CONVENIENCE RECEPTACLE WIRING ON ALL MODELS EXCEPT 480V UNITS

36 MONTH LIMITED WARRANTY

WINCO, Inc., warrants for thirty-six months from date of purchase, that it will repair or replace at its option, for the original user, the whole or any part of the product found upon examination, by WINCO at its factory at 225 South Cordova Avenue, Le Center, Minnesota, or by any factory-authorized service station, to be defective in material or workmanship under normal standby use (average less than 50 hours per month) and service.

For warranty service, return the product within 36 months from the date of purchase, transportation charges prepaid, to your nearest factory-authorized service station or the WINCO factory. THERE IS NO OTHER EXPRESS WARRANTY.

There is no other express warranty. To the extent permitted by law, any and all warranties, including those of merchantability and fitness for a particular purpose, are limited to 36 months from date of shipment, and liability for incidental or consequential damages or expenses is excluded. Some states do not allow limitations on the duration of an implied warranty, and some states do not allow the exclusion or limitation of incidental or consequential damages, so that above limitation or exclusion may not apply to you. This warranty gives you specific legal rights; you may have other rights which vary from state to state. Note: Some states do not allow limitation on the duration of implied warranty and some states do not allow the exclusion or limitation of incidental or consequential damages, so the above limitations may not apply in every instance. This warranty gives you specific legal rights which may vary from state to state.

EXCLUSIONS:

WINCO does not warrant drive lines, trailer tires, receptacles, or certain other component parts of the product installed by others, since such items are warranted by their manufacturers.

WINCO does not warrant modifications or alterations which were not made or authorized by the WINCO factory and which affect the stability or reliability of the product.

WINCO does not warrant products which have been exposed to misuse and/or negligence or have been involved in an accident.

WINCO does not warrant products which have been installed in such a manner as not to protect them from the adverse environmental conditions (water, mud, insects, etc.) or have not been kept clean.

WINCO reserves the right to change or improve its products without incurring any obligations to make such changes or improvements on products purchased previously.

This warranty is limited to bench labor and parts only, no allowance will be made for travel time, or removal and reinstallation of the PTO unit.