Installation

Residential/Commercial Generator Sets

Models:

14RCA
14RCAL
20RCA
20RCAL
26RCA
26RCAL

Controller:

RDC2

KOHLER®

TP-7091 4/23d

⚠ WARNING: This product can expose you to chemicals, including carbon monoxide and benzene, which are known to the State of California to cause cancer and birth defects or other reproductive harm. For more information go to www.P65warnings.ca.gov

Kohler strongly recommends that only factory-authorized dealers install and service the generator.

Product Identification Information

Product identification numbers determine service parts. Record the product identification numbers in the spaces below immediately after unpacking the products so that the numbers are readily available for future reference. Record field-installed kit numbers after installing the kits.

Generator Set Identification Numbers

Record the product identification numbers from the generator set nameplate(s).

Model Designation _____

Specification Number _____

Serial Number _____

Controller Identification

Record the controller description from the generator set operation manual, spec sheet, or sales invoice.

Controller Description_____

Engine Identification

Record the product identification information from the engine nameplate.

Manufacturer_____

Model Designation_____

Serial Number_____

Accessory Number	Accessory Description

Accessory Number	Accessory Description

Table of Contents

Safety Precautions and Instructions **5**
Introduction **11**
Service Assistance **13**
Section 1. Location and Mounting **15**
1.1 Introduction 15
1.2 Lifting 16
1.3 Generator Set Inspection 17
1.4 Location and Mounting 17
1.4.1 Mounting Area 17
1.4.2 Exhaust Requirements 18
1.5 Dimension Drawings 18
1.6 Access the Air Intake Area 19
Section 2. Fuel **21**
2.1 Fuel Requirements 21
2.1.1 Fuel Supply 21
2.1.2 Fuel Pipe Size 22
2.1.3 Connecting the Fuel Supply 23
2.2 Fuel Conversion 24
2.2.1 Fuel Conversion, Original Fuel System, 14RCA/L 25
2.2.2 Fuel Conversion, Original Fuel System, 20RCA/L 27
2.2.3 Fuel Conversion, Revised Fuel System, 14/20/26RCA/L 28
Section 3. Electrical **31**
3.1 Electrical Connections 31
3.1.1 Wire Selection 31
3.1.2 Grounding 32
3.1.3 Electrical Lead Entry 33
3.1.4 Field Connections 34
3.1.5 AC Power Supply 36
3.2 Battery 37
3.3 ATS and Accessory Communication Connections 39
3.3.1 Communication Cable Specifications 39
3.3.2 Transfer Switch Connection 40
3.3.3 System Connections with Accessory Modules 41
Section 4. Prestart **45**
4.1 Prestart Installation Check 45
4.2 Set the Exerciser 46
4.2.1 Setting the Exerciser 46
4.2.2 Loaded Exercise 46
Section 5. Accessories **47**
5.1 Introduction 47
5.2 Carburetor Heater 47
5.3 Programmable Interface Module (PIM) 50
5.4 OnCue Plus Generator Management System 51
5.5 Load Management Devices 52
5.5.1 Power Relay Module 53
5.6 PowerSync Automatic Paralleling Module (APM) 53

5.7 Cold Weather Package 55
5.7.1 Battery Heater 55
5.7.2 Breather Tube and Oil Heater 56
5.7.3 Fuel Regulator Heater (20 and 26 kW models only) 58
5.7.4 Alternator Weather Cover 60
5.7.5 Oil Pressure Sensor Boot 60
Section 6. Drawings and Diagrams 61
Appendix A. Abbreviations 87

IMPORTANT SAFETY INSTRUCTIONS. Electromechanical equipment, including generator sets, transfer switches, switchgear, and accessories, can cause bodily harm and pose life-threatening danger when improperly installed, operated, or maintained. To prevent accidents be aware of potential dangers and act safely. Read and follow all safety precautions and instructions. SAVE THESE INSTRUCTIONS.

This manual has several types of safety precautions and instructions: Danger, Warning, Caution, and Notice.

DANGER

DANGER indicates a hazardous situation which, if not avoided, will result in death or serious injury.

WARNING

WARNING indicates a hazardous situation which, if not avoided, could result in death or serious injury.

CAUTION

CAUTION indicates a hazardous situation which, if not avoided, could result in minor or moderate injury.

NOTICE

NOTICE is used to address practices not related to physical injury.

Safety decals affixed to the equipment in prominent places alert the operator or service technician to potential hazards and explain how to act safely. The decals are shown throughout this publication to improve operator recognition. Replace missing or damaged decals.

Accidental Starting

WARNING	
	Accidental starting. **Can cause severe injury or death.** Disconnect the battery cables before working on the generator set. Remove the negative (–) lead first when disconnecting the battery. Reconnect the negative (–) lead last when reconnecting the battery.

Disabling the generator set. Accidental starting can cause severe injury or death. Before working on the generator set or equipment connected to the set, disable the generator set as follows: (1) Place the generator set start/stop switch in the STOP position. (2) Disconnect the power to the battery charger, if equipped. (3) Remove the battery cables, negative (–) lead first. Reconnect the negative (–) lead last when reconnecting the battery. Follow these precautions to prevent the starting of the generator set by the remote start/stop switch.

Battery

WARNING	
	Sulfuric acid in batteries. **Can cause severe injury or death.** Wear protective goggles and clothing. Battery acid may cause blindness and burn skin.

WARNING	
	Explosion. **Can cause severe injury or death.** **Relays in the battery charger cause arcs or sparks.** Locate the battery in a well-ventilated area. Isolate the battery charger from explosive fumes.

Battery electrolyte is a diluted sulfuric acid. Battery acid can cause severe injury or death. Battery acid can cause blindness and burn skin. Always wear splashproof safety goggles, rubber gloves, and boots when servicing the battery. Do not open a sealed battery or mutilate the battery case. If battery acid splashes in the eyes or on the skin, immediately flush the affected area for 15 minutes with large quantities of clean water. Seek immediate medical aid in the case of eye contact. Never add acid to a battery after placing the battery in service, as this may result in hazardous spattering of battery acid.

Battery acid cleanup. Battery acid can cause severe injury or death. Battery acid is electrically conductive and corrosive. Add 500 g (1 lb.) of bicarbonate of soda (baking soda) to a container with 4 L (1 gal.) of water and mix the neutralizing solution. Pour the neutralizing solution on the spilled battery acid and continue to add the neutralizing solution to the spilled battery acid until all evidence of a chemical reaction (foaming) has ceased. Flush the resulting liquid with water and dry the area.

Battery gases. Explosion can cause severe injury or death. Battery gases can cause an explosion. Do not smoke or permit flames or sparks to occur near a battery at any time, particularly when it is charging. Do not dispose of a battery in a fire. To prevent burns and sparks that could cause an explosion, avoid touching the battery terminals with tools or other metal objects. Remove all jewelry before servicing the equipment. Discharge static electricity from your body before touching batteries by first touching a grounded metal surface away from the battery. To avoid sparks, do not disturb the battery charger connections while the battery is charging. Always turn the battery charger off before disconnecting the battery connections. Ventilate the compartments containing batteries to prevent accumulation of explosive gases.

Battery short circuits. Explosion can cause severe injury or death. Short circuits can cause bodily injury and/or equipment damage. Disconnect the battery before generator set installation or maintenance. Remove all jewelry before servicing the equipment. Use tools with insulated handles. Remove the negative (–) lead first when disconnecting the battery. Reconnect the negative (–) lead last when reconnecting the battery. Never connect the negative (–) battery cable to the positive (+) connection terminal of the starter solenoid. Do not test the battery condition by shorting the terminals together.

Engine Backfire/Flash Fire

WARNING	**Risk of fire.** **Can cause severe injury or death.** Do not smoke or permit flames or sparks near fuels or the fuel system.

Servicing the air cleaner. A sudden backfire can cause severe injury or death. Do not operate the generator set with the air cleaner removed.

Servicing the fuel system. A flash fire can cause severe injury or death. Do not smoke or permit flames or sparks near the carburetor, fuel line, fuel filter, fuel pump, or other potential sources of spilled fuels or fuel vapors. Catch fuels in an approved container when removing the fuel line or carburetor.

Combustible materials. A fire can cause severe injury or death. Generator set engine fuels and fuel vapors are flammable and explosive. Handle these materials carefully to minimize the risk of fire or explosion. Equip the compartment or nearby area with a fully charged fire extinguisher. Select a fire extinguisher rated ABC or BC for electrical fires or as recommended by the local fire code or an authorized agency. Train all personnel on fire extinguisher operation and fire prevention procedures.

Exhaust System

WARNING	**Carbon monoxide.** **Can cause severe nausea, fainting, or death.** The exhaust system must be leakproof and routinely inspected.

Generator set operation. Carbon monoxide can cause severe nausea, fainting, or death. Carbon monoxide is an odorless, colorless, tasteless, nonirritating gas that can cause death if inhaled for even a short time. Avoid breathing exhaust fumes when working on or near the generator set. Never operate the generator set inside a building. Never operate the generator set where exhaust gas could seep inside or be drawn into a potentially occupied building through windows, air intake vents, or other openings.

Carbon monoxide detectors. Carbon monoxide can cause severe nausea, fainting, or death. Install carbon monoxide detectors on each level of any building adjacent to the generator set. Locate the detectors to adequately warn the building's occupants of the presence of carbon monoxide. Keep the detectors operational at all times. Periodically test and replace the carbon monoxide detectors according to the manufacturer's instructions.

Carbon monoxide symptoms. Carbon monoxide can cause severe nausea, fainting, or death. Carbon monoxide is a poisonous gas present in exhaust gases. Carbon monoxide is an odorless, colorless, tasteless, nonirritating gas that can cause death if inhaled for even a short time. Carbon monoxide poisoning symptoms include but are not limited to the following:

- Light-headedness, dizziness
- Physical fatigue, weakness in joints and muscles
- Sleepiness, mental fatigue, inability to concentrate or speak clearly, blurred vision
- Stomachache, vomiting, nausea

If experiencing any of these symptoms and carbon monoxide poisoning is possible, seek fresh air immediately and remain active. Do not sit, lie down, or fall asleep. Alert others to the possibility of carbon monoxide poisoning. Seek medical attention if the condition of affected persons does not improve within minutes of breathing fresh air.

Fuel System

WARNING	
	Explosive fuel vapors. **Can cause severe injury or death.** Use extreme care when handling, storing, and using fuels.

The fuel system. Explosive fuel vapors can cause severe injury or death. Vaporized fuels are highly explosive. Use extreme care when handling and storing fuels. Store fuels in a well-ventilated area away from spark-producing equipment and out of the reach of children. Never add fuel to the tank while the engine is running because spilled fuel may ignite on contact with hot parts or from sparks. Do not smoke or permit flames or sparks to occur near sources of spilled fuel or fuel vapors. Keep the fuel lines and connections tight and in good condition. Do not replace flexible fuel lines with rigid lines. Use flexible sections to avoid fuel line breakage caused by vibration. Do not operate the generator set in the presence of fuel leaks, fuel accumulation, or sparks. Repair fuel systems before resuming generator set operation.

Gas fuel leaks. Explosive fuel vapors can cause severe injury or death. Fuel leakage can cause an explosion. Check the LPG vapor or natural gas fuel system for leakage by using a soap and water solution with the fuel system test pressurized to 6–8 ounces per square inch (10–14 inches water column). Do not use a soap solution containing either ammonia or chlorine because both prevent bubble formation. A successful test depends on the ability of the solution to bubble.

Explosive fuel vapors can cause severe injury or death. Take additional precautions when using the following fuels:

Propane (LPG)—Adequate ventilation is mandatory. Because propane is heavier than air, install propane gas detectors low in a room. Inspect the detectors per the manufacturer's instructions.

Natural Gas—Adequate ventilation is mandatory. Because natural gas rises, install natural gas detectors high in a room. Inspect the detectors per the manufacturer's instructions.

Hazardous Noise

CAUTION	
	Hazardous noise. **Can cause hearing loss.** Never operate the generator set without a muffler or with a faulty exhaust system.

Engine noise. Hazardous noise can cause hearing loss. Generator sets not equipped with sound enclosures can produce noise levels greater than 105 dBA. Prolonged exposure to noise levels greater than 85 dBA can cause permanent hearing loss. Wear hearing protection when near an operating generator set.

Hazardous Voltage/Moving Parts

DANGER	
	Hazardous voltage. **Will cause severe injury or death.** This equipment must be installed and serviced by qualified electrical personnel.

DANGER	
	Hazardous voltage. Moving parts. **Will cause severe injury or death.** Operate the generator set only when all guards and electrical enclosures are in place.

WARNING	
	Hazardous voltage. Backfeed to the utility system. **Can cause property damage, severe injury, or death.** If the generator set is used for standby power, install an automatic transfer switch to prevent inadvertent interconnection of standby and normal sources of supply.

CAUTION
Welding the generator set. **Can cause severe electrical equipment damage.** Welding on generator set will cause serious damage to engine electronic controls components. Disconnect all engine electronic control connections before welding.

Grounding electrical equipment. Hazardous voltage will cause severe injury or death. Electrocution is possible whenever electricity is present. Ensure you comply with all applicable codes and standards. Electrically ground the generator set and related equipment and electrical circuits. Turn off the main circuit breakers of all power sources before servicing the equipment. Never contact electrical leads or appliances when standing in water or on wet ground because these conditions increase the risk of electrocution.

Welding on the generator set. Can cause severe electrical equipment damage. Before welding on the generator set perform the following steps: (1) Remove the battery cables, negative (–) lead first. (2) Disconnect all engine electronic control module (ECM) connectors. (3) Disconnect all generator set controller and voltage regulator circuit board connectors. (4) Disconnect the engine battery-charging alternator connections. (5) Attach the weld ground connection close to the weld location.

Connecting the battery and the battery charger. Hazardous voltage will cause severe injury or death. Reconnect the battery correctly, positive to positive and negative to negative, to avoid electrical shock and damage to the battery charger and battery(ies). Have a qualified electrician install the battery(ies).

Short circuits. Hazardous voltage/current will cause severe injury or death. Short circuits can cause bodily injury and/or equipment damage. Do not contact electrical connections with tools or jewelry while making adjustments or repairs. Remove all jewelry before servicing the equipment.

Electrical backfeed to the utility. Hazardous backfeed voltage can cause severe injury or death. Install a transfer switch in standby power installations to prevent the connection of standby and other sources of power. Electrical backfeed into a utility electrical system can cause severe injury or death to utility personnel working on power lines.

Heavy Equipment

WARNING	
	Unbalanced weight. **Improper lifting can cause severe injury or death and equipment damage.** Do not use lifting eyes. Lift the generator set using lifting bars inserted through the lifting holes on the skid.

Hot Parts

WARNING	
	Hot engine and exhaust system. **Can cause severe injury or death.** Do not work on the generator set until it cools.

Servicing the exhaust system. Hot parts can cause severe injury or death. Do not touch hot engine parts. The engine and exhaust system components become extremely hot during operation.

Servicing the engine heater. Hot parts can cause minor personal injury or property damage. Install the heater before connecting it to power. Operating the heater before installation can cause burns and component damage. Disconnect power to the heater and allow it to cool before servicing the heater or nearby parts.

NOTICE

Canadian installations only. For standby service connect the output of the generator set to a suitably rated transfer switch in accordance with Canadian Electrical Code, Part 1.

This manual provides installation instructions for Residential/Commercial Model 14RCA/L, 20RCA/L, and 26RCA/L generator sets. See Figure 1. Refer to the Operation Manual for generator set operation and maintenance instructions. RCAL models include a Kohler model RXT automatic transfer switch (ATS). The ATS installation instructions are provided in a separate manual. See the List of Related Literature for document part numbers.

The generator set is approved for use in stationary applications in locations served by a reliable utility power source.

Kohler strongly recommends that only factory authorized dealers install and service the generator.

Have a Kohler® authorized dealer install the generator set outdoors according to the instructions in this manual. The generator set installation must comply with the National Electrical Code (NEC) and local code requirements.

Do not install or operate this generator set indoors.

Information in this publication represents data available at the time of print. Kohler Co. reserves the right to change this publication and the products represented without notice and without any obligation or liability whatsoever.

Read this manual and carefully follow all procedures and safety precautions to ensure proper equipment operation and to avoid bodily injury. Read and follow the Safety Precautions and Instructions section at the beginning of this manual.

Figure 1 Generator Set

Warranty Registration

The RDC2 controller requires an unlock code to operate in automatic (AUTO) mode. The unlock code needs to be entered only once. See TP-7238 for instructions to register the generator set in Kohler Power Assistant and obtain the unlock code. Complete the startup and installation checklists supplied with the startup notification form.

List of Related Literature

Figure 2 identifies literature available for the generator sets and related accessories covered in this manual. Only trained and qualified personnel should install or service the generator set.

Generator Set Literature	Literature Part No.
Specification Sheet, 14RCA/L	G4-270
Specification Sheet, 20RCA/L	G4-272
Specification Sheet, 26RCA/L	G4-315
Installation Manual, Generator Set	TP-7091
Operation Manual, Generator Sets	TP-7092
Warranty Registration and Controller Unlock Code	TP-7238
Service Manual, Generator Set	TP-7093
Transfer Switch Literature	
Operation/Installation Manual, Model RDT Transfer Switch	TP-7192
Operation/Installation Manual, Model RXT Automatic Transfer Switch	TP-7193
Accessory Literature	
User Guide, OnCue© Plus	TP-7006
Technical Manual, OnCue© Plus	TP-7007
Operation Manual, SiteTech™ Software	TP-6701
Firmware Update Using the USB Utility	TT-1636
Accessory Installation Instructions	
Carburetor Heater Kit, 14 kW Models	TT-1297
Carburetor Heater Kit, 20 and 26 kW Models	TT-1482
Fuel Regulator Heater Kit	TT-1569
Programmable Interface Module (PIM)	TT-1584
PowerSync® Automatic Paralleling Module (APM)	TT-1596
Load Shed Kit	TT-1609
Battery Heater Kit	TT-1634
Power Relay Modules	TT-1646
Breather Tube Heater and Oil Heater	TT-1709
Oil Pressure Sensor Boot Kit	TT-1717
OnCue Plus Wireless Kit	TT-1721
Remote Emergency Stop Switch (Lockable)	TT-1795

Figure 2 Related Literature

Service Assistance

For professional advice and conscientious service, please contact your nearest Kohler dealer.

- Visit the Kohler Co. website at KOHLERPower.com.
- Look at the labels and decals on your Kohler product or review the appropriate literature or documents included with the product.
- Call toll free in the US and Canada 1-800-544-2444.

Notes

1.1 Introduction

DANGER	**Hazardous voltage.** **Will cause severe injury or death.** This equipment must be installed and serviced by qualified electrical personnel.

WARNING	**Carbon monoxide.** **Can cause severe nausea, fainting, or death.** The exhaust system must be leakproof and routinely inspected.

Generator set operation. Carbon monoxide can cause severe nausea, fainting, or death. Carbon monoxide is an odorless, colorless, tasteless, nonirritating gas that can cause death if inhaled for even a short time. Avoid breathing exhaust fumes when working on or near the generator set. Never operate the generator set inside a building. Never operate the generator set where exhaust gas could seep inside or be drawn into a potentially occupied building through windows, air intake vents, or other openings.

Carbon monoxide detectors. Carbon monoxide can cause severe nausea, fainting, or death. Install carbon monoxide detectors on each level of any building adjacent to the generator set. Locate the detectors to adequately warn the building's occupants of the presence of carbon monoxide. Keep the detectors operational at all times. Periodically test and replace the carbon monoxide detectors according to the manufacturer's instructions.

Have the generator set installed by an authorized Kohler dealer or authorized representative. For all locations, ensure that the installation complies with applicable national and local codes. In the United States, the installation must comply with the National Electrical Code (NEC) and local codes. For Canadian installations, refer to the Canadian Electrical Code (CEC).

The generator set must be installed outdoors. The exhaust systems on enclosed units are designed for outdoor installation only.

Note:
DO NOT install or operate these generator sets inside a building.

Note:
Install carbon monoxide (CO) detector(s) on each level of any building adjacent to a generator set. Locate the detectors to adequately warn the building's occupants of the presence of carbon monoxide.

Obtain a building permit and contact your local utility companies to mark the locations of underground pipes and cables.

Read and follow the safety precautions in this manual and observe the decals on the equipment. Refer to the diagrams and drawings in this manual for dimensions and electrical connections during the installation procedure. Read the entire installation procedure and obtain the accessories and tools needed before beginning installation. Perform the steps in the order shown.

To install optional accessories, follow the instructions provided with each kit.

1.2 Lifting

WARNING	
	Unbalanced weight. **Improper lifting can cause severe injury or death and equipment damage.** Do not use lifting eyes. Lift the generator set using lifting bars inserted through the lifting holes on the skid.

Generator set weights are shown in Figure 3. These shipping weights include the generator set and packaging with skid, but do not include the battery or an automatic transfer switch. Use lifting bars inserted through the holes in the base to lift the unit. See Figure 4 for lifting hole locations. To access the lifting holes:

1. Raise the roof.
2. Lift off the exhaust end panel and the air intake end panel. No tools are required to remove the enclosure panels.
3. Lift off the service side panel.
4. Insert lifting bars through the holes in the base to lift the generator set.

After placing the generator set in its final location, use the plastic plugs provided with the generator set to cover the lifting holes that are not covered by the enclosure panels.

Model	Weight, kg (lb.)*
14RCA	200 (440)
20RCA	252 (555)
26RCA	283 (625)
* Weights include generator set and packaging with skid; no battery or ATS.	

Figure 3 Approximate Weights

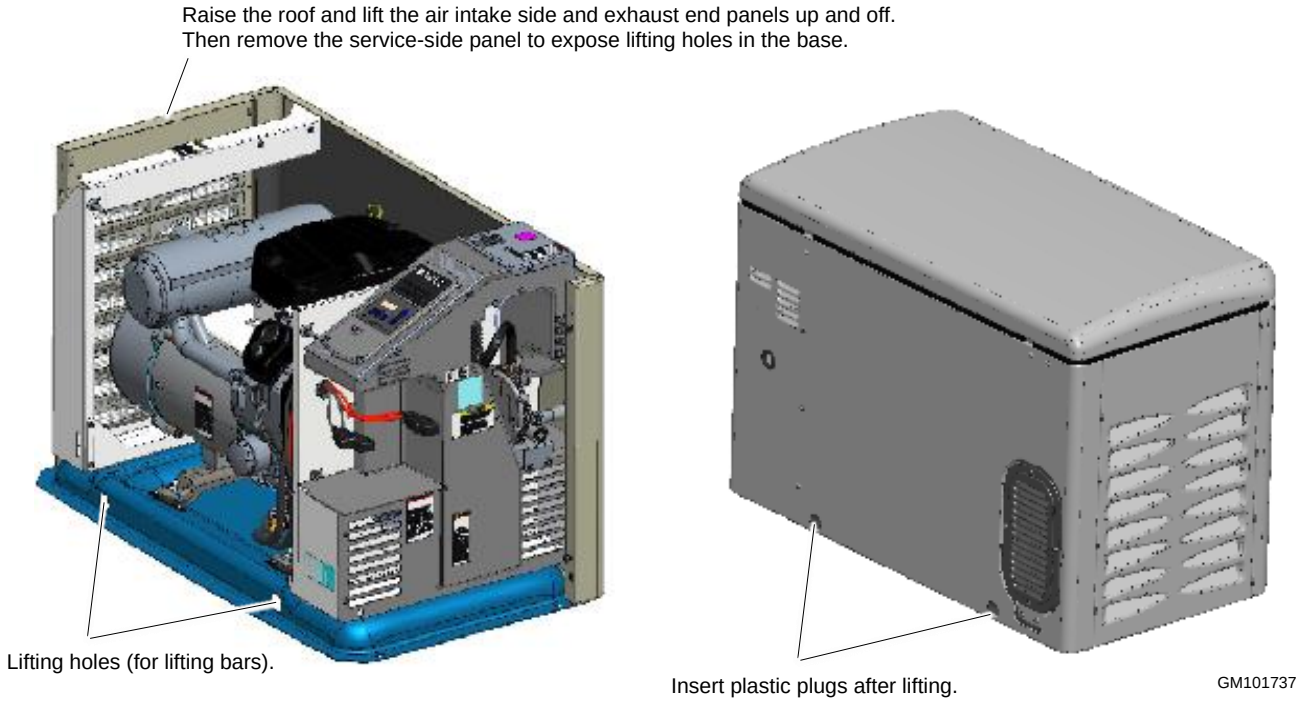

Figure 4 Lifting Holes

1.3 Generator Set Inspection

Complete a thorough inspection of the generator set.

Check for the following:

1. Inspect the generator set for loose or damaged parts or wires. Repair or tighten any loose parts before installation.
2. Check the engine oil. Fill, if necessary, with the recommended viscosity and grade of oil. Use synthetic oil, API (American Petroleum Institute) Service Class SG or higher. See the Operation Manual for additional information.

1.4 Location and Mounting

Install the generator set outdoors near the incoming gas service. The generator set location must allow easy access for maintenance and service. The required distance from a structure is dependent on state and local codes. See the dimension drawing in the **Drawings and Diagrams** section for the minimum clearance from structures and non-combustible materials.

Locate the generator set so that the hot exhaust does not blow on plants or other combustible materials. No plants, shrubs, or other combustible materials are allowed within 1.2 m (4 ft.) of the exhaust end of the generator set.

Do not install the generator set where exhaust gas could accumulate and seep inside or be drawn into a potentially occupied building. Furnace and other similar intakes must be at least 3 m (10 ft.) from the exhaust end of the generator set.

⚠ WARNING

DO NOT locate the generator set near patios, decks, play areas, or animal shelters. Keep items such as lawn furniture, toys, sports equipment, and all combustible materials away from the generator set exhaust outlet.

Remind family members, children, and visitors to use caution near the generator set. Generator sets connected to automatic transfer switches start automatically during exercise periods and power outages. Some generator set components become hot when the generator set is running and remain hot for a time after the generator set shuts down.

1.4.1 Mounting Area

Prepare the generator set mounting area. The mounting area must:

1. Provide a flat, level surface for the generator set.
2. Allow easy access for maintenance and service.
3. Support the weight of the generator set with related equipment, such as the battery and mounting pad.
4. Support the generator set weight for the lifetime of the generator set.
5. Meet applicable building codes.
6. Not be subject to flooding.

Clear all combustible materials, including plants and shrubs, building materials, and lawn furniture, from an area at least 1.2 m (4 ft.) beyond the exhaust end of the generator set. See the dimension drawing in the **Drawings and Diagrams** section.

The generator set is shipped on an aluminum base. Set the base directly on the mounting area or on an optional concrete mounting pad.

1.4.2 Exhaust Requirements

Figure 5 gives the exhaust temperature at rated load. The engine exhaust mixes with the generator set cooling air at the exhaust end of the enclosure. Mount the generator set so that the hot exhaust does not blow on plants or other combustible materials. Maintain the clearances shown in the dimension drawing.

Exhaust	Temperature, °C (°F)
Exhaust gas exiting the enclosure at rated kW, °C (°F)	260 (500)

Figure 5 Exhaust Flow and Temperature

The generator set requires correct air flow for cooling and combustion. The inlet and outlet openings in the sound enclosure provide the cooling and combustion air. Figure 6 shows the locations of the cooling air intake and exhaust vents. Inspect the air inlet and outlet openings inside and outside the enclosure to ensure that the air flow is not blocked.

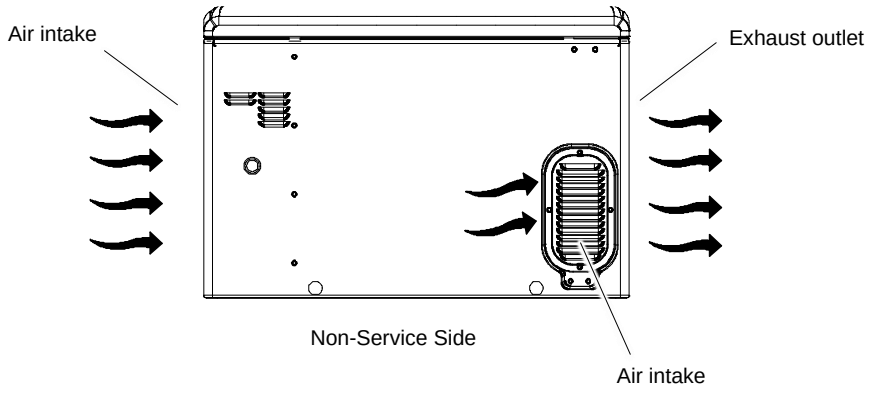

14 and 20 kW models

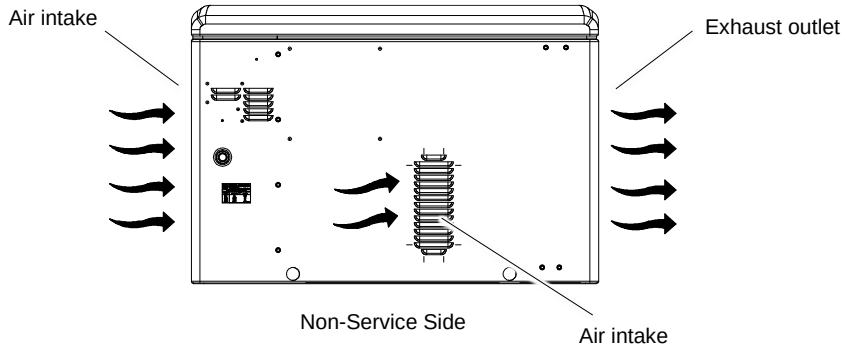

26 kW models

Figure 6 Cooling Air Intake and Exhaust

1.5 Dimension Drawings

See the dimension drawings in the **Drawings and Diagrams** section for the generator set dimensions, fuel and electric inlet locations, and recommended clearance.

1.6 Access the Air Intake Area

The battery, fuel system, and some electrical connections are located in the air intake area. Remove the enclosure panel to access the air intake area during installation as described below. No tools are required to remove and replace the service-side, air intake end, or exhaust end panels.

1. Unlock and raise the enclosure roof.
2. The air intake panel hangs on four 20 mm (0.8 in.) diameter bushings. Pull the air intake panel up and off. See Figure 7.
3. To make the electrical connections, you will also need to remove the cover panel over the terminal block.
4. After all electrical connections are complete and the battery is installed and connected, reinstall the panels. Align the four angled slots on the panel with the bushings on the enclosure and lower the panel into place.

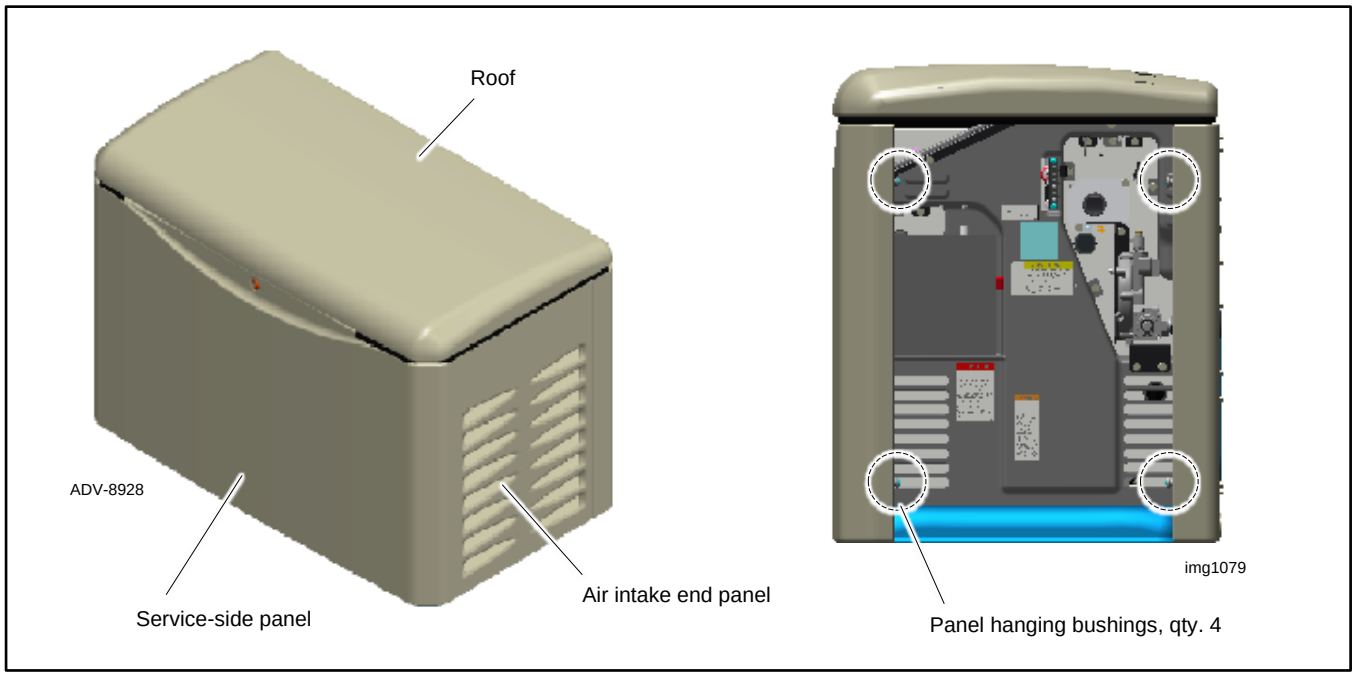

Figure 7 Removing the Air Intake Panel

Notes

2.1 Fuel Requirements

The generator set operates using natural gas or LPG fuel. The generator set is EPA-certified for both natural gas and LPG fuels.

The fuel system installation must comply with applicable national, state, and local codes.

WARNING	
	Explosive fuel vapors. **Can cause severe injury or death.** Use extreme care when handling, storing, and using fuels.

Explosive fuel vapors can cause severe injury or death. Take additional precautions when using the following fuels:

Propane (LPG)—Adequate ventilation is mandatory. Because propane is heavier than air, install propane gas detectors low in a room. Inspect the detectors per the manufacturer's instructions.

Natural Gas—Adequate ventilation is mandatory. Because natural gas rises, install natural gas detectors high in a room. Inspect the detectors per the manufacturer's instructions.

2.1.1 Fuel Supply

Because of variable climates and geographical considerations, contact the local fuel supplier for fuel system planning and installation. Figure 8 lists the recommended fuel ratings and other fuel supply information for natural gas and LPG fuels.

Verify that the output pressure from the primary gas utility pressure regulator is within the range shown in Figure 8 and that the utility gas meter flow rate is sufficient to supply the generator set at rated load plus all other gas-consuming appliances. For LPG tanks, verify that the output pressure is as shown in Figure 8. See Figure 9 for fuel consumption. Contact the fuel supplier for flow rate information or a gas meter upgrade, if necessary.

Fuel Type	**Natural Gas**	**LPG**
Fuel supply inlet	½ NPT	
Fuel supply pressure, kPa (in. H_2O)		
14RCA/L	1.2-2.7 (5-11)	1.7-2.7 (7-11)
20RCA/L	0.9-2.7 (3.5-11)	
26RCA/L		
Fuel flow rate, maximum, Btu/hr.		
14RCA/L	193,000	203,000
20RCA/L	281,000	340,000
26RCA/L	290,000	322,500
Nominal Fuel Rating, Btu/ft.^{3}		
Natural gas	1000	
LPG	2500	

Figure 8 Fuel Supply

Fuel Type	% Load	Fuel Consumption, m^3/hr. (cfh)		
		14RCA/L	20RCA/L	26RCA/L
		60 Hz	60 Hz	60 Hz
Natural Gas	100%	5.4 (193)	8.0 (281)	8.2 (290)
	75%	4.7 (163)	6.9 (243)	6.7 (238)
	50%	3.5 (124)	4.6 (161)	5.1 (180)
	25%	2.6 (93)	3.6 (127)	3.9 (137)
LPG	100%	2.3 (81)	3.9 (136)	3.6 (129)
	75%	2.1 (75)	3.1 (109)	3.1 (111)
	50%	1.8 (60)	2.3 (82)	2.4 (85)
	25%	1.2 (45)	1.7 (59)	1.8 (64)

LPG conversion factors:
8.58 $ft.^3$ = 1 lb.
0.535 m^3 = 1 kg
36.39 ft.3 = 1 gal.

Nominal fuel rating:
Natural gas: 37 MJ/m^3 (1000 $Btu/ft.^3$)
LPG: 93 MJ/m^3 (2500 $Btu/ft.^3$)

Figure 9 Fuel Consumption

2.1.2 Fuel Pipe Size

Ensure that the fuel pipe size and length meet the specifications in Figure 10. Measure the pipe length from the primary gas pressure regulator to the pipe connection on the generator set fuel inlet. Add 2.4 m (8 ft.) to the measured length for each 90-degree elbow. Compare the total pipe length with the chart in Figure 10 to find the required pipe size.

Contact the local LPG provider for LPG installation information.

Minimum Gas Pipe Size Recommendation, in. NPT						
Pipe Length, m (ft.)	14RCA/L		20RCA/L		26RCA/L	
	Natural Gas (193,000 Btu/hr.)	LPG (203,000 Btu/hr.)	Natural Gas (281,000 Btu/hr.)	LPG (340,000 Btu/hr.)	Natural Gas (290,000 Btu/hr.)	LPG (322,500 Btu/hr.)
8 (25)	¾	¾	1	¾	1	¾
15 (50)	1	¾	1	1	1 ¼	1
30 (100)	1	1	1 ¼	1	1 ¼	1
46 (150)	1 ¼	1	1 ¼	1 ¼	1 ¼	1
61 (200)	1 ¼	1	1 ¼	1 ¼	1 ½	1 ¼

Figure 10 Fuel Pipe Size Recommendations

2.1.3 Connecting the Fuel Supply

The dimension drawing in the **Drawings and Diagrams** section shows the location of the fuel inlet connection. Have the fuel supplier install rigid gas piping and a manual fuel shut-off valve. The fuel supply line should line up with the generator set fuel inlet and end about 12 inches away to allow connection with a section of flexible fuel line. Use flexible sections to prevent fuel line breakage caused by vibration.

Note:
Do not bend the flexible fuel line to make up for misalignment of the fuel supply line and the generator set fuel inlet.

Apply pipe sealant that is approved for fuel connections. A factory-installed bracket prevents the fuel solenoid valve from turning when the fuel connections are tightened. Do not place a wrench on the coil at the top of the fuel solenoid valve when tightening the fuel connections. See Figure 11 for the recommended wrench locations.

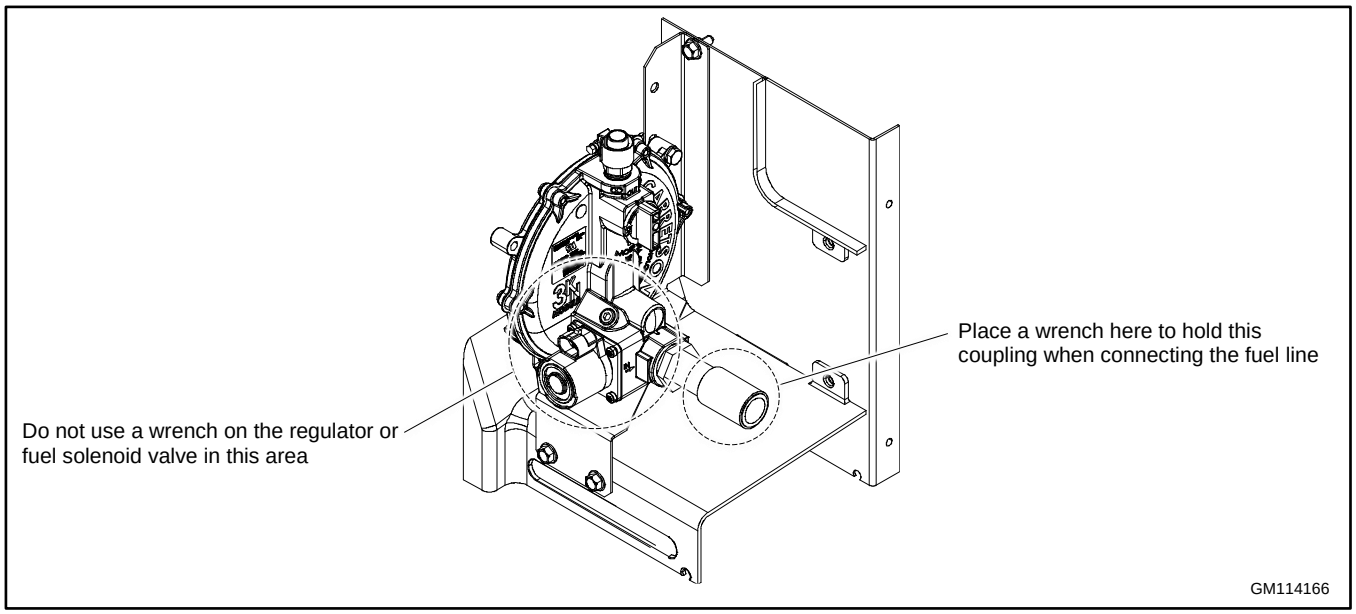

Figure 11 Holding Fuel Pipe to Tighten Fuel Connections (Revised Fuel System Shown)

Open the manual fuel valves and test all fuel connections using soapy water. If a leak is found, close the fuel valves, clean the fittings, and apply fresh sealant. Check for fuel leaks again with the generator set running.

Protect all fuel lines from machinery or equipment contact, adverse weather conditions, and environmental damage.

2.2 Fuel Conversion

The multi-fuel system allows conversion from natural gas to LPG (or vice-versa) in the field while maintaining emissions-standard compliance. A trained technician or an authorized dealer can convert the fuel system.

After converting the fuel system, change the Fuel Type setting on the controller. See the Operation Manual for instructions to change settings at the controller, or use a personal (laptop) computer and Kohler© SiteTech™ software to change the setting.

A revised fuel system was implemented in February, 2021. The fuel system can be identified by comparing the regulator and solenoid valve with the illustrations in the following sections.

The original fuel system uses fuel orifice fittings to control the fuel flow for natural gas (NG) or LPG fuels. The original system uses a fuel regulator and a separate fuel solenoid valve. The revised fuel system uses a fuel regulator with a fuel selector valve and an integrated fuel solenoid valve. The next sections provide illustrations and instructions to convert the fuel on generator sets with the original and revised designed.

Rating Change

Converting the fuel will change the generator set rating. See the generator set specification sheet for ratings with natural gas and LP. Order a new nameplate with the updated rating and fuel information from an authorized dealer, if necessary. Provide the following information from the original nameplate:

- Model Number
- Spec Number
- Serial Number
- Fuel (original and new)
- kW
- kVA
- Amps
- Volts
- Hz
-

Attach the new nameplate over the old one. Do NOT cover the UL listing information on the old nameplate.

WARNING	
	Accidental starting. **Can cause severe injury or death.** Disconnect the battery cables before working on the generator set. Remove the negative (–) lead first when disconnecting the battery. Reconnect the negative (–) lead last when reconnecting the battery.

Disabling the generator set. Accidental starting can cause severe injury or death. Before working on the generator set or equipment connected to the set, disable the generator set as follows: (1) Place the generator set start/stop switch in the STOP position. (2) Disconnect the power to the battery charger, if equipped. (3) Remove the battery cables, negative (–) lead first. Reconnect the negative (–) lead last when reconnecting the battery. Follow these precautions to prevent the starting of the generator set by the remote start/stop switch.

WARNING	
	Explosive fuel vapors. **Can cause severe injury or death.** Use extreme care when handling, storing, and using fuels.

Explosive fuel vapors can cause severe injury or death. Take additional precautions when using the following fuels:

Propane (LPG)—Adequate ventilation is mandatory. Because propane is heavier than air, install propane gas detectors low in a room. Inspect the detectors per the manufacturer's instructions.

Natural Gas—Adequate ventilation is mandatory. Because natural gas rises, install natural gas detectors high in a room. Inspect the detectors per the manufacturer's instructions.

2.2.1 Fuel Conversion, Original Fuel System, 14RCA/L

For natural gas and LPG fuel, orifice fittings are used in the fuel line. See Figure 12. The natural gas orifice fitting is silver in color and stamped NG. The LPG fitting is gold in color and stamped LPG. The fittings are threaded. A straight-blade screwdriver is required to remove and replace the fittings.

Figure 12 NG and LPG Fuel Orifice Fittings

The unit is typically shipped set up for natural gas, with the LPG fitting tied near the fuel solenoid valve. To convert to LPG, remove the NG fitting and install the LPG fitting as described below. See Figure 13 for the fuel system component locations.

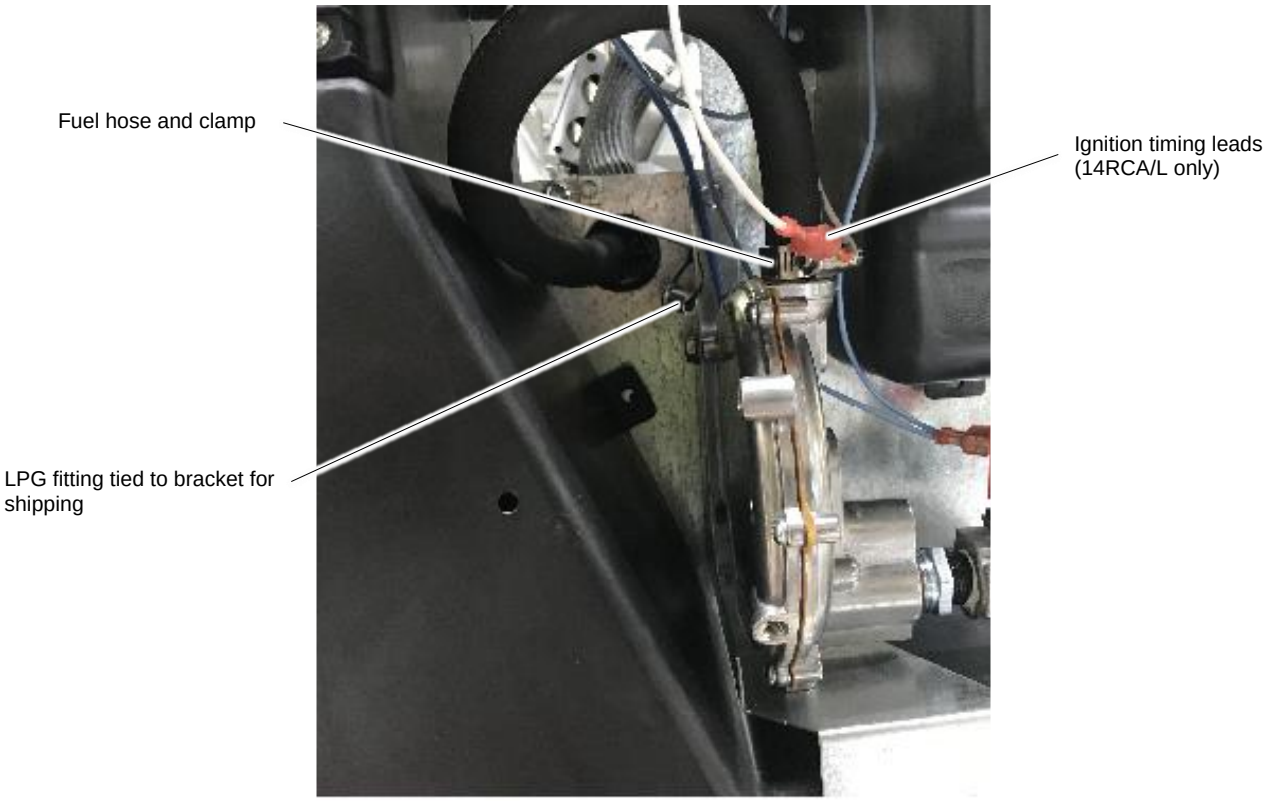

Ignition Timing Lead Connection, 14RCA/L only

IGNITION TIMING	
FUEL TYPE	
NATURAL GAS	CONNECT 65 TO N
LP GAS	DO NOT CONNECT

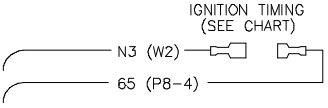

Figure 13 Fuel System, As Shipped

Procedure to Convert from NG to LPG, 14RCA/L

1. Press the OFF button on the generator set controller.
2. Disconnect the utility power to the generator.
3. Disconnect the generator set engine starting battery, negative (-) lead first.
4. Turn off and disconnect the fuel supply.
5. Remove the hose clamp and fuel hose from the hose fitting. See Figure 14.
6. Use a straight-blade screwdriver to remove the NG orifice from the hose fitting. See Figure 14.
7. Insert the LPG orifice into the hose fitting. Use a straight-blade screwdriver to tighten the fitting until it is snug.
8. Slide the hose onto the hose fitting and secure it with the clamp.
9. Disconnect ignition timing leads 65 and N3 for LPG. The ignition timing leads are located near the top of the compartment. See Figure 13.
10. Connect and turn on the new fuel supply.
11. Reconnect the generator set engine starting battery leads, negative (-) lead last.
12. Reconnect the utility power to the generator.
13. Start the generator set by pressing the RUN button on the generator set controller.
14. Check for leaks using a gas leak detector.
15. Run the generator set and check the operation.
16. Press the OFF button to shut down the generator set.

Conversion from LPG to Natural Gas, 14RCA/L

To convert from LPG to natural gas, repeat the steps above, removing the LPG fuel orifice and installing the NG fitting. Connect ignition timing leads 65 and N3 together for natural gas.

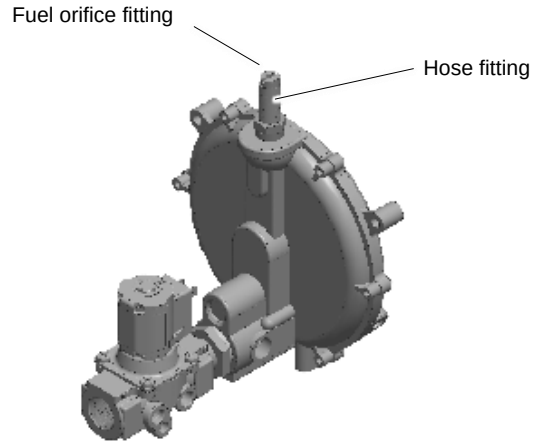

Figure 14 Fuel System Showing Orifice Fitting (14RCA/L)

2.2.2 Fuel Conversion, Original Fuel System, 20RCA/L

For LPG fuel, an orifice is used in the fuel line. The unit is typically shipped set up for natural gas, with the loose orifice tied near the fuel solenoid valve. To convert to LPG, install the LPG orifice as described below. See Figure 15 for the fuel system component locations.

Note:
The generator set harness may contain a pair of ignition timing leads near the fuel solenoid valve. Connecting or disconnecting these leads has no effect on the 20RCA/RCAL operation.

Procedure to Convert from NG to LPG, 20RCA/L

1. Press the OFF button on the generator set controller.
2. Disconnect utility power to the generator set (open the corresponding circuit breaker in the distribution panel).
3. Disconnect the generator set engine starting battery, negative (-) lead first.
4. Turn off the fuel supply.
5. Remove the hose clamp and fuel hose from the hose fitting. See Figure 15.
6. Insert the LPG orifice into the hose fitting. See Figure 15.
7. Slide the hose onto the hose fitting and secure it with the clamp.
8. Connect and turn on the new fuel supply.
9. Reconnect the generator set engine starting battery leads, negative (-) lead last.
10. Reconnect utility power to the generator set.
11. Start the generator set by pressing the RUN button on the generator set controller.
12. Check for leaks using a gas leak detector.
13. Run the generator set and check the operation.
14. Press the OFF button to shut down the generator set.

Conversion from LPG to Natural Gas, 20RCA/L

To convert from LPG to natural gas, repeat the steps above to remove the LPG fuel orifice

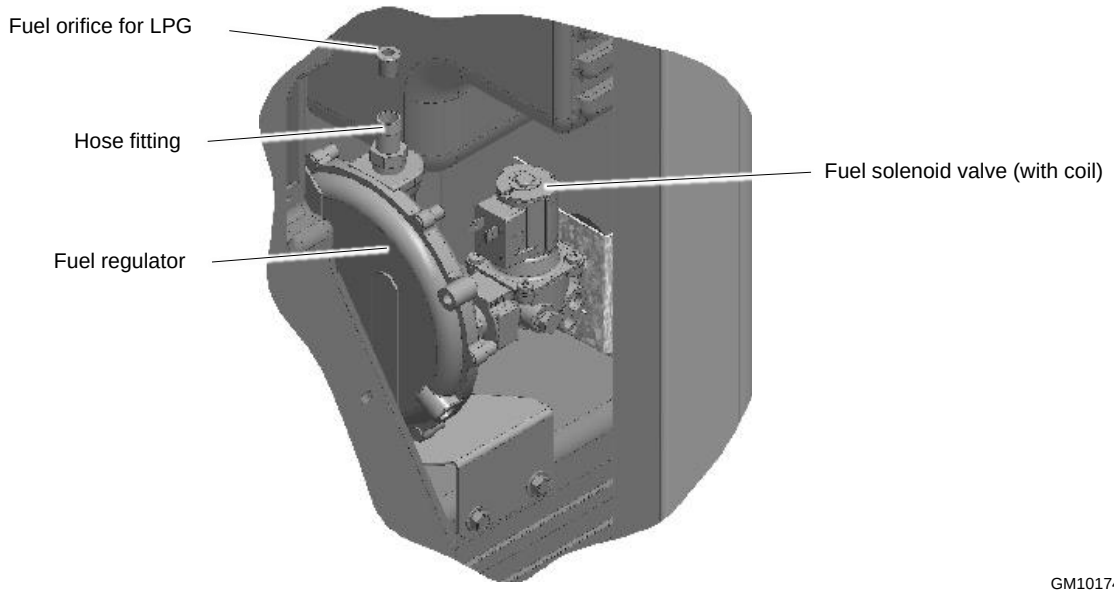

Figure 15 Fuel Regulator and LPG Orifice, 20RCA/L

2.2.3 Fuel Conversion, Revised Fuel System, 14/20/26RCA/L

The revised fuel system uses a knob that controls a valve on the regulator to select the fuel type. See Figure 16 and Figure 17.

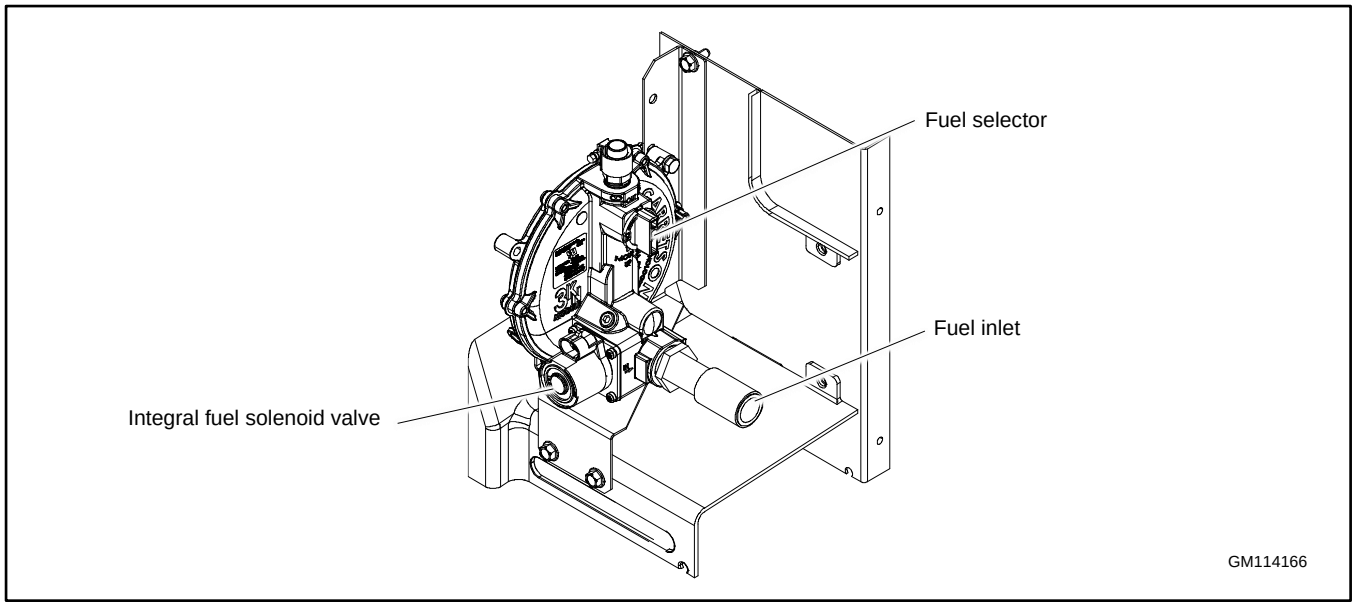

Figure 16 Revised Fuel System

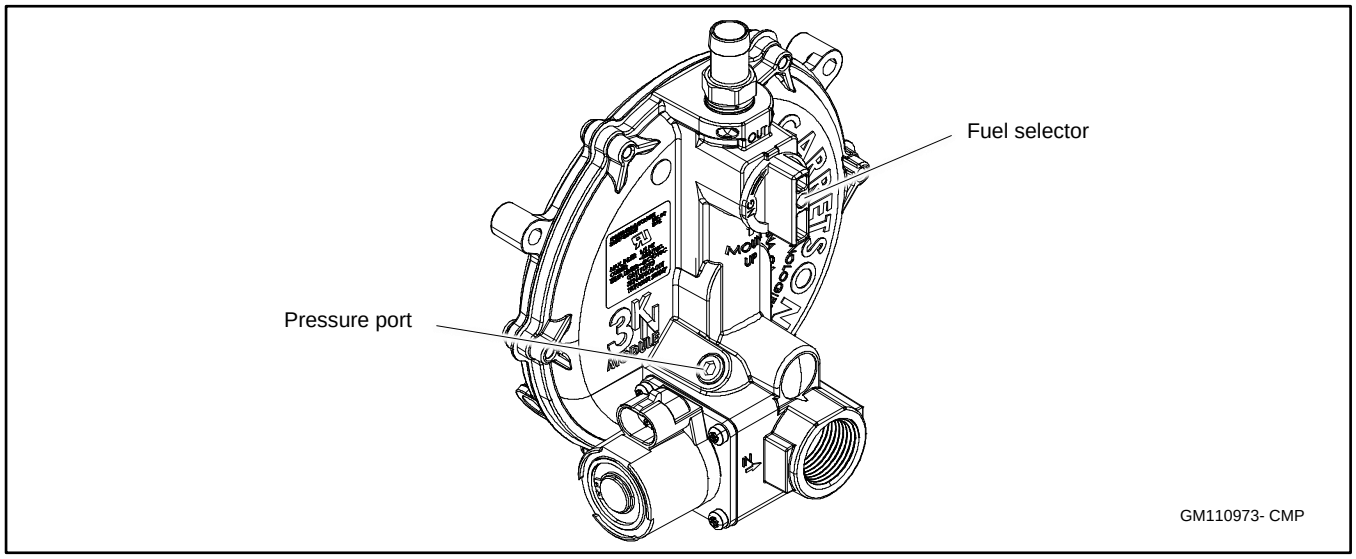

Figure 17 Fuel Selection (NG Position Shown)

Fuel Selection, Revised Fuel System

1. Press the OFF button on the generator set controller.
2. Disconnect utility power to the generator set (open the corresponding circuit breaker in the distribution panel).
3. Disconnect the generator set engine starting battery, negative (-) lead first.
4. Turn off the fuel supply.
5. To change the fuel selection:
   a. For natural gas (NG), turn the selection knob all the way clockwise. The knob lines up with the UP arrow on the regulator body as shown in Figure 18.

14 and 20 kW Models

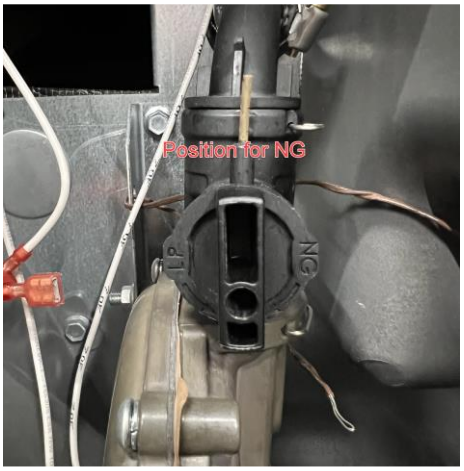

26 kW Models

Figure 18 Knob Position, NG

   b. For LPG, turn the selection knob counterclockwise as far as it will go, approximately ¼ turn. See Figure 19.

14 and 20 kW Models

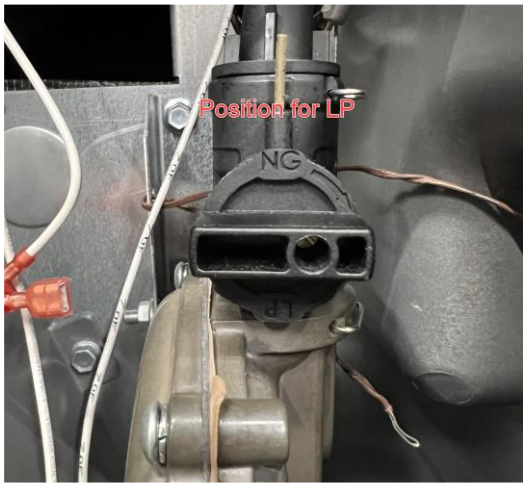

26 kW Models

Figure 19 Knob Position, LPG

6. Find the ignition timing leads 65 and N, located near the regulator. See Figure 20.
    a. For natural gas (NG), connect lead 65 to lead N3.
    b. For LPG, disconnect lead 65 from lead N3.

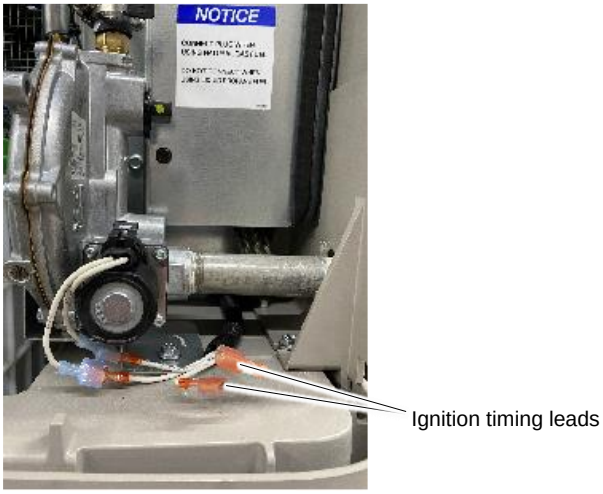

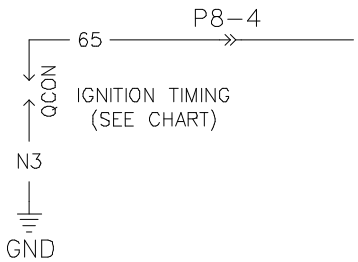

IGNITION TIMING	
FUEL TYPE	CH740
NATURAL GAS	CONNECT 65 TO N3
LP GAS	DO NOT CONNECT

Figure 20 Ignition Timing Leads

7. Connect and turn on the fuel supply (Ensure that the fuel supply matches the fuel setting).
8. Reconnect the generator set engine starting battery leads, negative (-) lead last.
9. Reconnect the utility power to the generator.
10. Change the fuel type setting on the RDC2 controller in the Genset System menu. See the Operation Manual for instructions to change settings on the controller.
11. Start the generator set by pressing the RUN button on the generator set controller.
12. Check for leaks using a gas leak detector.
13. Run the generator set and check the operation.
14. Press the OFF button to shut down the generator set.

Pressure Port

A pressure port is provided on the fuel regulator. See Figure 17. Follow these steps to check the fuel pressure at the regulator, if necessary.

1. Remove the plug from the fuel pressure port.
2. Connect a manometer capable of measuring low pressures (3-11 inches water column) to the pressure port.
3. When finished, replace the plug in the pressure port and check for leaks.

3.1 Electrical Connections

DANGER	
	Hazardous voltage. **Will cause severe injury or death.** This equipment must be installed and serviced by qualified electrical personnel.

Grounding electrical equipment. Hazardous voltage will cause severe injury or death. Electrocution is possible whenever electricity is present. Ensure you comply with all applicable codes and standards. Electrically ground the generator set and related equipment and electrical circuits. Turn off the main circuit breakers of all power sources before servicing the equipment. Never contact electrical leads or appliances when standing in water or on wet ground because these conditions increase the risk of electrocution.

Electrical backfeed to the utility. Hazardous backfeed voltage can cause severe injury or death. Install a transfer switch in standby power installations to prevent the connection of standby and other sources of power. Electrical backfeed into a utility electrical system can cause severe injury or death to utility personnel working on power lines.

NOTICE

Canadian installations only. For standby service connect the output of the generator set to a suitably rated transfer switch in accordance with Canadian Electrical Code, Part 1.

Have an authorized dealer or a licensed electrician make the following electrical connections. The electrical installation must comply with the National Electrical Code® (NEC) class 1 wire designation and all applicable local codes. Canadian installations must comply with the Canadian Electrical Code (CEC) and applicable local codes.

AC circuit protection. All AC circuits must include circuit breaker or fuse protection. The circuit breaker must be rated for a maximum of 125% of the rated generator set output current. The circuit breaker must open all ungrounded connectors. The generator set is equipped with a factory-installed circuit breaker.

3.1.1 Wire Selection

For customer-supplied wiring, select the wire temperature rating in Figure 21 based upon the following criteria:

1. Select row 1, 2, 3, or 4 if the circuit rating is 110 amperes or less or requires #1 AWG (42.4 mm^2) or smaller conductors.
2. Select row 3 or 4 if the circuit rating is greater than 110 amperes or requires #1 AWG (42.4 mm^2) or larger conductors.

Row	Temp. Rating	Copper (Cu) Only	Cu/Aluminum (Al) Combinations	Al Only
1	60°C (140°F) or 75°C (167°F)	Use No. * AWG, 60°C wire or Use No. * AWG, 75°C wire	Use 60°C wire, either No. * AWG Cu, or No. * AWG Al or use 75°C wire, either No. * AWG Cu or No. * AWG Al	Use 60°C wire, No. * AWG or Use 75°C wire, No. * AWG
2	60°C (140°F)	Use No. * AWG, 60°C wire	Use 60°C wire, either No. * AWG Cu or No. * AWG Al	Use 60°C wire, No. * AWG
3	75°C (167°F)	Use No. *† AWG, 75°C wire	Use 75°C wire, either No. *† AWG Cu or No. *† AWG Al	Use 75°C wire, No. *† AWG
4	90°C (194°F)	Use No. *† AWG, 90°C wire	Use 90°C wire, either No. *† AWG Cu or No. *† AWG Al	Use 90°C wire, No. *† AWG

∗ The wire size for 60°C (140°F) wire is not required to be included in the marking. If included, the wire size is based on ampacities for the wire given in Table 310-16 of the National Electrical Code®, in ANSI/NFPA 70, and on 115% of the maximum current that the circuit carries under rated conditions. The National Electrical Code® is a registered trademark of the National Fire Protection Association, Inc.

† Use the larger of the following conductors: the same size conductor as that used for the temperature test or one selected using the guidelines in the preceding footnote.

Figure 21 Terminal Markings for Various Temperature Ratings and Conductors

The National Electrical Code® is a registered trademark of the National Fire Protection Association, Inc.

3.1.2 Grounding

Ground the generator set. **The grounding method must comply with NEC and local codes**. Connect the ground to the generator set ground lug, terminal GND in the customer connection area. See Figure 22.

The requirement for having a bonded (grounded) neutral or ungrounded neutral is determined by the type of installation. The generator is shipped with a floating Neutral. At installation, the neutral can be grounded at the generator set or lifted from the ground stud and isolated if the installation requires an ungrounded neutral connection at the generator. The generator set will operate properly with the neutral either bonded to ground or isolated from ground at the generator.

Note:
When shipped, the generator neutral is not bonded (grounded) to the generator ground.

Various regulations and site configurations including the National Electrical Code (NEC), local codes, and the type of transfer switch used in the application determine the grounding of the neutral at the generator. NEC Section 250 is one example that has a very good explanation of the neutral grounding requirements for generators.

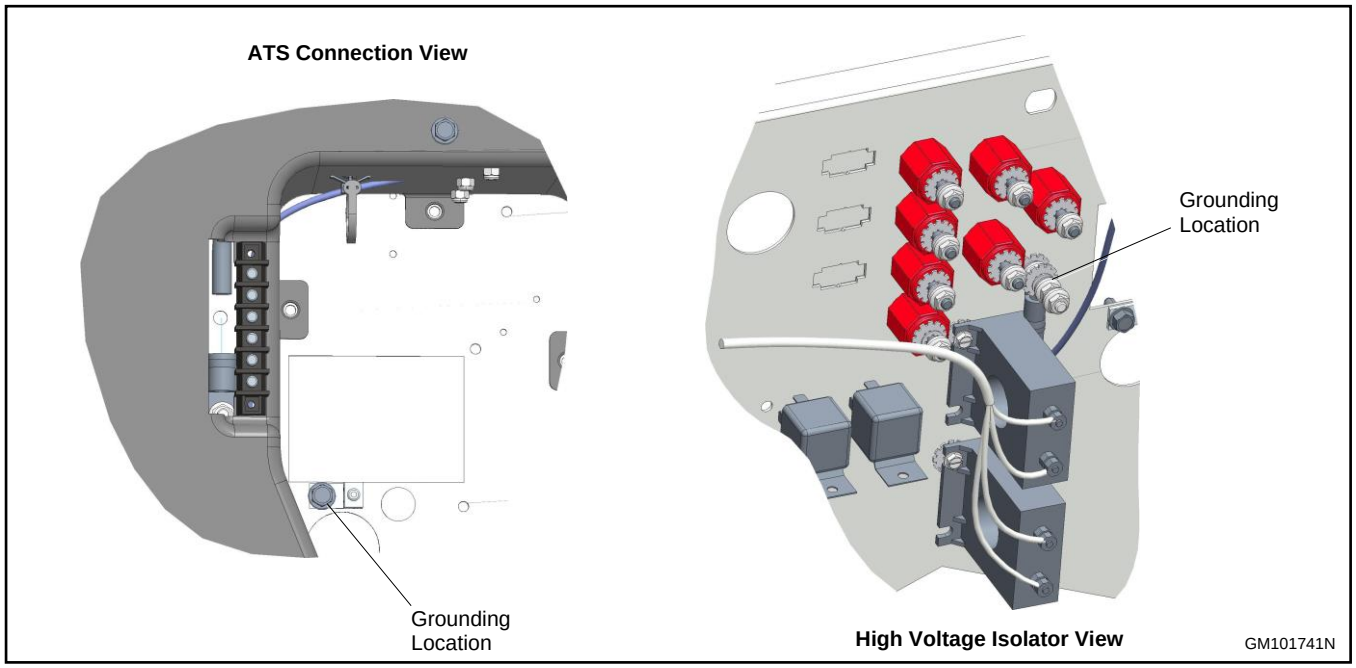

Figure 22 Ground Connection

3.1.3 Electrical Lead Entry

Drill or punch holes in the enclosure for the electrical conduit in the locations shown in Figure 23. To avoid interference with the roof when it is open, use a 90-degree elbow at the AC voltage entry point and direct the conduit away from the roof.

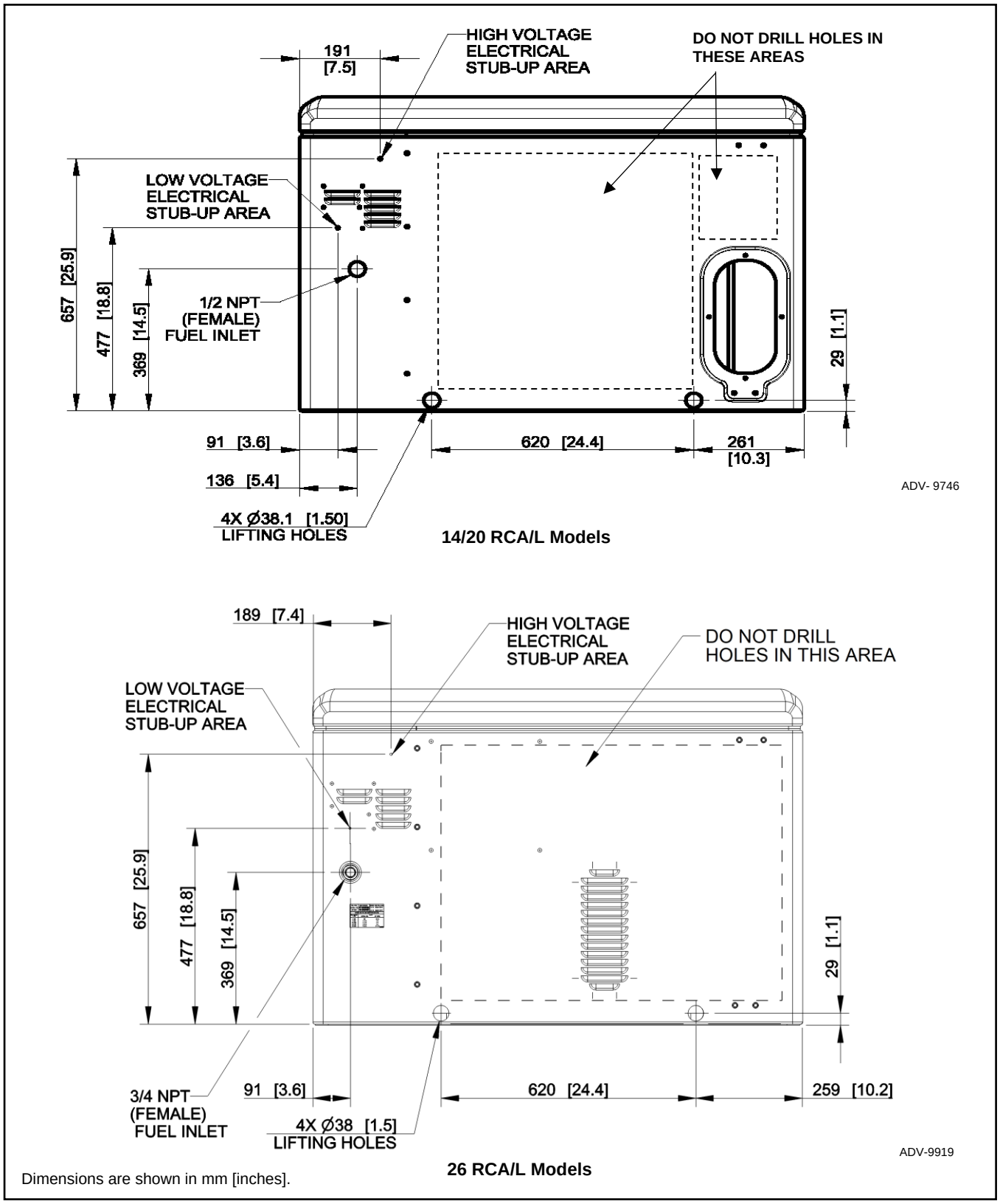

Figure 23 Electrical Lead Entry Locations

3.1.4 Field Connections

Customer connection points are located as shown in Figure 24. Open the enclosure roof and locate the cover panel over the circuit breaker. Remove the cover panel to access the power and load connections.

Remove the air intake end panel for access to the engine start and communication connections to the transfer switch. See the **ATS and Accessory Communication Connections** section for more details about the transfer switch connections.

Route AC leads through flexible conduit. Ensure that the leads and conduit do not interfere with the operation of the generator set or obstruct the service areas. Route low-voltage communication leads through separate conduit.

Before connecting utility power to the generator or connecting the battery, connect the RXT transfer switch and any RBUS accessories to the generator set terminal block (A, B, PWR, and COM).

Procedure

1. Punch or drill holes for the conduit fittings. See the figure titled: Electrical Lead Entry Locations for the recommended electrical inlet locations. Feed the cables through the openings.
2. Connect the leads from the transfer switch emergency source lugs to the L1, L2, and L3 connections on the load circuit breaker as applicable for single or three-phase applications. See Figure 24.
3. Connect the neutral (L0) and ground (GRD) leads from the ATS and the main panel to the corresponding connection points near the circuit breaker. See Figure 24. Also see the **Grounding** section.
4. Connect AC power source leads to the terminal block connections labeled HOT, NEUTRAL and GROUND. **Connect to a circuit that is fed by the load side of the transfer switch to ensure that battery charging power is available at all times.** See the **AC Power Supply** section for more information about the AC power requirement.

   Note:
   To maintain the charge on the engine starting battery, AC power must be connected to a circuit that is fed by the load side of the transfer switch so that it is backed up by the generator.
5. Connect a model RXT, RDT, or other transfer switch to the terminal block in the air intake area. See Figure 24 and the **Transfer Switch Connection** section.
6. For connection of optional accessories, including the programmable interface module (PIM), and/or a load shed kit, see the **Transfer Switch Connection** section.

   Note:
   Connect the shield on the outside of the accessory communication cable to the ground lug near the terminal block (item 6 in Figure 24).
7. If the OnCue® Plus Generator Management System will be used with the generator set, choose a hard-wired or wireless connection.
   - For wireless connection, obtain the OnCue Plus Wireless Kit and follow the instructions provided with the kit.
   - For a hard-wired connection, follow these steps to run category 5E network cable from the generator set to the customer's router or modem.

   a. Route the network cable with other low-voltage signal wiring (for example, the RBUS communication leads or engine start leads to the transfer switch), in separate conduit from the AC load leads. If the network cable is longer than 100 meters (328 ft.), use a repeater or switch.

   b. Use an RJ45 inline coupler to connect the Ethernet cable to the cable in the customer connection box. See Figure 24. The inline coupler is included with the OnCue Plus kit.

      As an alternative, the Ethernet cable can be connected directly to Ethernet connector P6 on the back of the RDC2 controller.
8. When connections are complete, replace the cover plate.

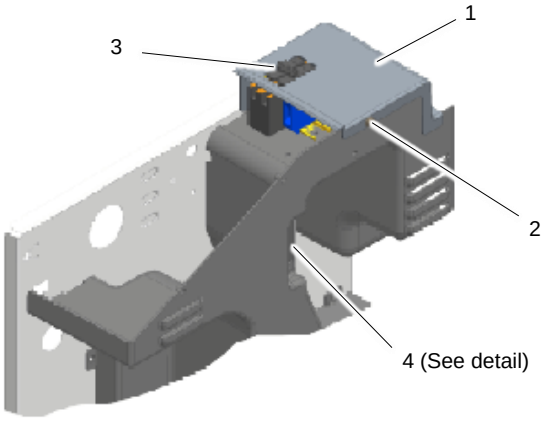

GM101739

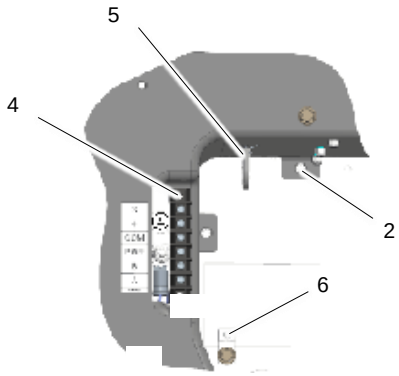

LOW VOLTAGE
CONNECTION DETAIL

GM101741C

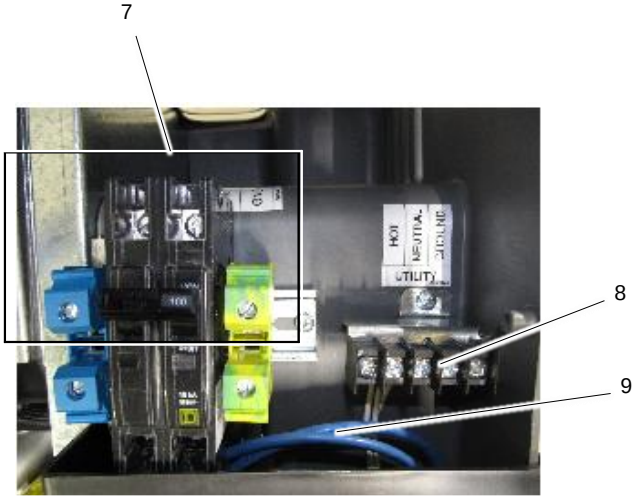

1. Cover panel. Remove for access to power and load connections.
2. Cover panel screws, qty. 2.
3. Load circuit breaker.
4. Transfer switch and accessory low voltage connections.
5. Use cable tie to secure low voltage connections.
6. Ground connection for communication cable shield.
7. Load connections.
8. AC power supply connections (for battery charging; connect to load side of transfer switch).
9. Network cable for OnCue Plus

Note:
Circuit breaker will vary for different voltage configurations.

Figure 24 Customer Connections

3.1.5 AC Power Supply

The installer must connect AC power for the battery charger (which is integral to the RDC2 controller) and the optional accessories shown in Figure 25. The power source must comply with state and local codes. The power to the battery charger and accessories must be backed up by the generator so that power is available at all times.

Be sure to disconnect power at the distribution panel before making the connections. Connect power leads to the AC power connection points labeled LINE, NEUTRAL, and GROUND on the field-connection terminal block. Connect to a circuit that is fed by the load side of the transfer switch, so that it is backed up by the generator. See the **Field Connections** section and the wiring diagrams in the **Drawings and Diagrams** section for connection details.

Equipment	**Power Requirement, Max.**	
	Watts	**Volts at 50/60 Hz**
Battery charger (standard)	50	100-120 VAC
	50	200-250 VAC
Carburetor heater (optional)	37	100-120 VAC
	37	200-250 VAC
Battery heater (optional)	50	100-120 VAC
	50	200-250 VAC
Oil heater (optional)	60	100-120 VAC
Breather tube heater (optional)		
14RCA/L	5	100-120 VAC
20RCA/L	10.4	100-120 VAC
26RCA/L	5	100-120 VAC
Fuel regulator heater (optional; available for 20RCA/L and 26RCA/L only)	60	100-120 VAC
	100	200-250 VAC

Figure 25 Power Requirements

3.2 Battery

WARNING	
	Sulfuric acid in batteries. **Can cause severe injury or death.** Wear protective goggles and clothing. Battery acid may cause blindness and burn skin.

WARNING	
	Explosion. **Can cause severe injury or death.** **Relays in the battery charger cause arcs or sparks.** Locate the battery in a well-ventilated area. Isolate the battery charger from explosive fumes.

Battery electrolyte is a diluted sulfuric acid. Battery acid can cause severe injury or death. Battery acid can cause blindness and burn skin. Always wear splashproof safety goggles, rubber gloves, and boots when servicing the battery. Do not open a sealed battery or mutilate the battery case. If battery acid splashes in the eyes or on the skin, immediately flush the affected area for 15 minutes with large quantities of clean water. Seek immediate medical aid in the case of eye contact. Never add acid to a battery after placing the battery in service, as this may result in hazardous spattering of battery acid.

Battery acid cleanup. Battery acid can cause severe injury or death. Battery acid is electrically conductive and corrosive. Add 500 g (1 lb.) of bicarbonate of soda (baking soda) to a container with 4 L (1 gal.) of water and mix the neutralizing solution. Pour the neutralizing solution on the spilled battery acid and continue to add the neutralizing solution to the spilled battery acid until all evidence of a chemical reaction (foaming) has ceased. Flush the resulting liquid with water and dry the area.

Battery gases. Explosion can cause severe injury or death. Battery gases can cause an explosion. Do not smoke or permit flames or sparks to occur near a battery at any time, particularly when it is charging. Do not dispose of a battery in a fire. To prevent burns and sparks that could cause an explosion, avoid touching the battery terminals with tools or other metal objects. Remove all jewelry before servicing the equipment. Discharge static electricity from your body before touching batteries by first touching a grounded metal surface away from the battery. To avoid sparks, do not disturb the battery charger connections while the battery is charging. Always turn the battery charger off before disconnecting the battery connections. Ventilate the compartments containing batteries to prevent accumulation of explosive gases.

Battery short circuits. Explosion can cause severe injury or death. Short circuits can cause bodily injury and/or equipment damage. Disconnect the battery before generator set installation or maintenance. Remove all jewelry before servicing the equipment. Use tools with insulated handles. Remove the negative (–) lead first when disconnecting the battery. Reconnect the negative (–) lead last when reconnecting the battery. Never connect the negative (–) battery cable to the positive (+) connection terminal of the starter solenoid. Do not test the battery condition by shorting the terminals together.

Connecting the battery and the battery charger. Hazardous voltage will cause severe injury or death. Reconnect the battery correctly, positive to positive and negative to negative, to avoid electrical shock and damage to the battery charger and battery(ies). Have a qualified electrician install the battery(ies).

Battery Description

Starting batteries are usually the lead-acid type. Use a 12-volt group 51 battery with a minimum rating of 500 cold cranking amps at 0°F. The generator set uses a negative ground with a 12-volt engine electrical system. See Figure 26 for battery connections. Make sure that the battery is correctly connected and the terminals are tight.

Note:
The generator set will not start and circuit board damage may occur if the battery is connected in reverse.

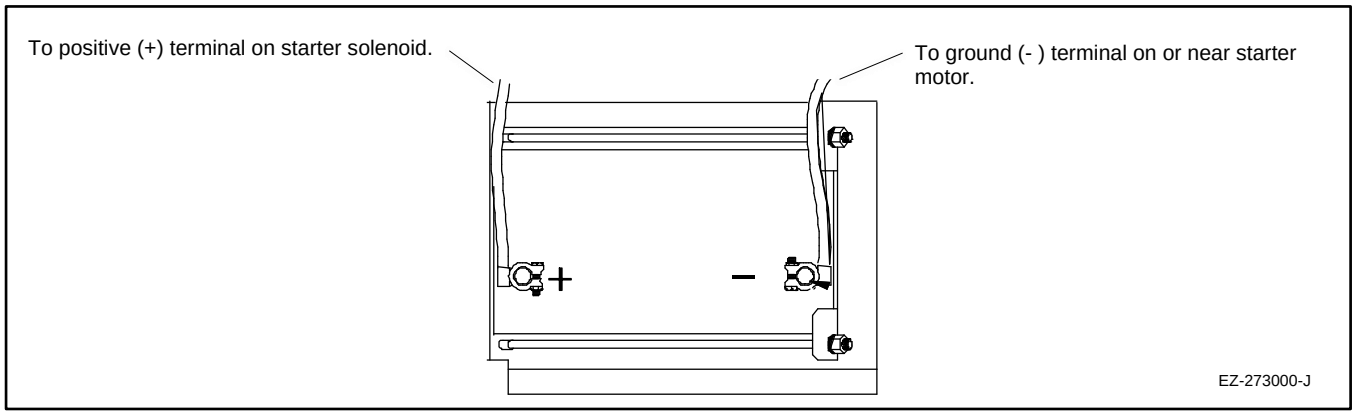

Figure 26 Typical Battery Connection

See the dimension drawing in the **Drawings and Diagrams** section for the engine starting battery location on the air intake side of the generator set. Standard battery cables provide easy connection to the battery.

Use the following procedure to install and connect the battery.

Battery Installation Procedure

1. Ensure that the starting battery is fully charged before placing the battery in service.
2. Clean the battery posts and/or adapters if necessary.
3. Install the battery post adapters, if needed.
4. Place the battery in the housing.
5. Connect the positive (+) lead to the engine starting battery.
6. Connect the negative (-) lead to the engine starting battery.

Refer to the generator set operation manual and the battery manufacturer’s instructions for battery maintenance instructions.

When power is applied to the RDC2 controller (that is, when the battery is connected), you will be prompted to set the date and time, and then to set the exerciser. See the **Set the Exerciser** section and the generator set operation manual for instructions.

If the battery is disconnected for service or replacement, the exercise settings on the RDC2 controller are lost. Set the exerciser after installing and connecting the battery. See the **Set the Exerciser** section.

3.3 ATS and Accessory Communication Connections

The following sections cover communication connections from the generator set to automatic transfer switches and RBUS accessories, including the programmable interface module (PIM) and the load shed kit.

3.3.1 Communication Cable Specifications

RBUS Connections A and B

For the RBUS communication connections A and B to the optional RBUS modules, use 20 AWG shielded, twisted-pair communication cable. Belden #9402 (two-pair) or Belden #8762 (single-pair) or equivalent cable is recommended. Optional RBUS modules can include the Model RXT transfer switch, RXT combined interface/ load management board, automatic paralleling module (APM), programmable interface module (PIM), and/or the load shed kit for the RDT or RXT transfer switch.

For outdoor installations, including those with buried cables and/or conduit, use outdoor-rated Belden #1075A or equivalent 20 AWG shielded, twisted-pair communication cable.

PWR and COM Connections

For the PWR and COM connections, the cable size and maximum cable length depends on the number of modules connected. See Figure 27.

1. For short cable runs shown in the first two rows of Figure 27, use one pair in the two-pair communication cable for the A and B connections, and use the second pair for the PWR and COM connections.
2. For the longer cable runs shown in the last two rows of Figure 27, use 12 or 14 AWG cable for PWR and COM, and use the 20 AWG communication cable specified above for the A and B connections only. In this case, single-pair communication cable such as Belden #8762 can be used for the A and B connections.

	Maximum length per run, meters (ft.)			
	Number of Modules (RXT, APM, PIM, and/or load management device) per Run			
Cable (TB1- PWR and COM)	**1 Module**	**2 Modules**	**3 Modules**	**4 Modules**
Belden #9402 or equivalent 20AWG for indoor installations	46 (150)	15 (50)	5 (17)	Do not use 20AWG for PWR and COM
Belden #1075A or equivalent 20AWG for outdoor installations or buried cables	46 (150)	15 (50)	5 (17)	Do not use 20AWG for PWR and COM
14 AWG *	137 (450)	137 (450)	107 (350)	107 (350)
12 AWG *	137 (450)	137 (450)	137 (450)	137 (450)
* Use 12 or 14 AWG cable for PWR and COM connections only. For RBUS connections A and B, use shielded, twisted pair communication cable specified above.				

Figure 27 Total Cable Lengths for PWR and COM Connections

3.3.2 Transfer Switch Connection

Connect the ATS or remote start/stop switch. Connect the load leads from the generator set to the Emergency source lugs on the ATS. Route low-voltage communication leads through separate conduit from the AC power and load leads. All connections must comply with applicable state and local codes.

Communication connections for a Model RXT transfer switch

One Model RXT transfer switch can be connected to the generator set. See Figure 28. Use shielded, twisted-pair communication cable to connect P10-1 through P10-4 on the transfer switch interface module to the generator set terminal block connections A, B, PWR, and COM. See the **Communication Cable Specifications** section for the communication cable recommendations and maximum cable length.

Note:
Connections 3 and 4 on the generator set are not used with the Model RXT transfer switch.

Engine start connection for other transfer switches or a remote start/stop switch

Connect the engine start leads from the transfer switch or remote start switch to terminals 3 and 4 on the terminal block. See Figure 29. Route the engine start leads through separate conduit from the AC power and load leads.

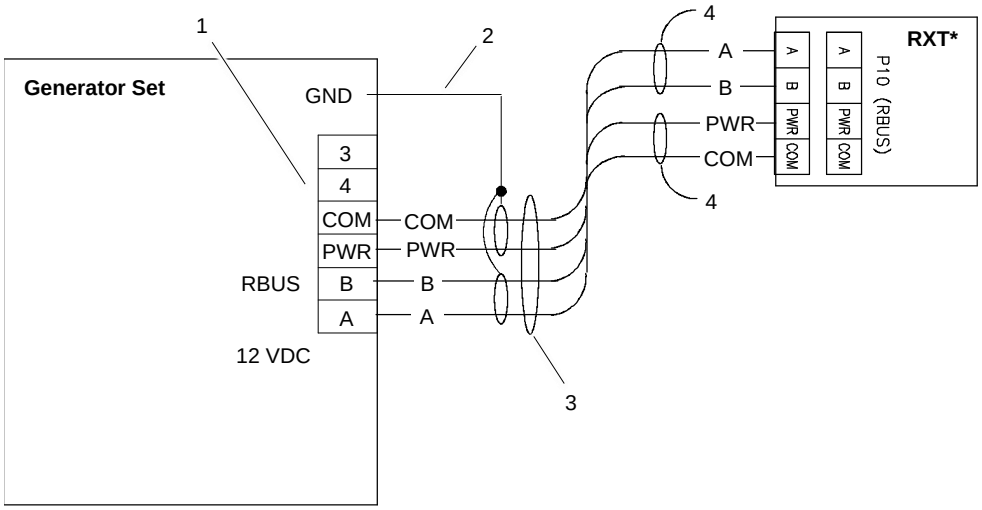

Note:
Generator set terminal block connections 3 and 4 are NOT USED with the Model RXT ATS.
∗ RXT transfer switch with standard or combined interface/ load management board.

1. Generator set terminal block. Check the decal on the generator set for terminal block connections.
2. Connect one end of each cable shield to GROUND at the generator set.
3. Communication cable Belden #9402 or equivalent 20 AWG shielded, twisted-pair cable. See the **Communication Cable Specifications** section.
4. Leave one end of each cable shield disconnected. If accessory modules (PIM or load shed kit) are connected, see the **System Connections with Accessory Modules** section.

Figure 28 Model RXT Transfer Switch Communication Connection to Generator Set Terminal Block

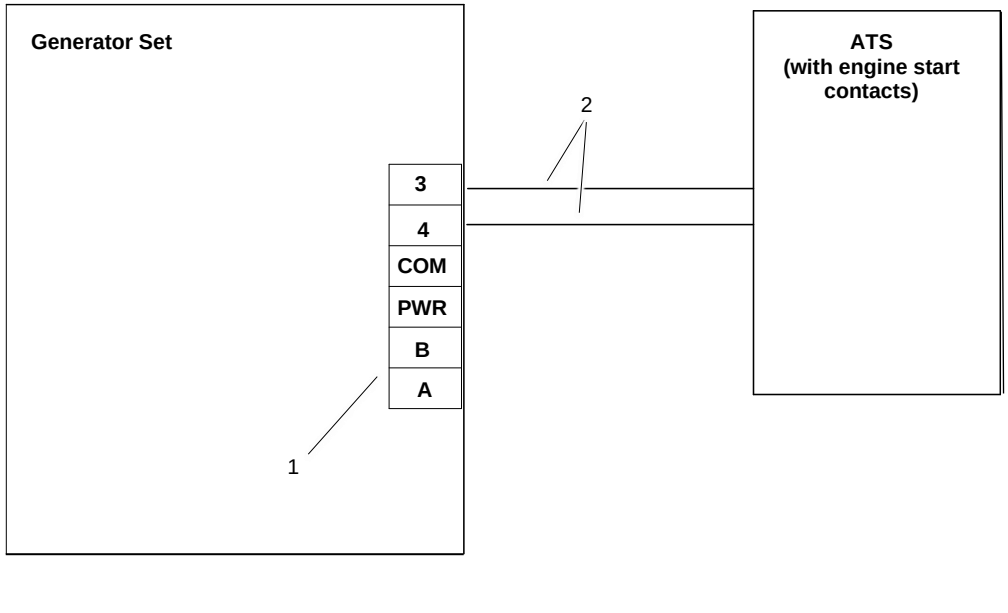

1. Generator Set Terminal Block. Check the decal on the generator set for terminal block connections.
2. Engine start leads 3 and 4. See the ATS manual for cable size specifications.

Figure 29 Engine Start Connections with Transfer Switch Models other than Model RXT

3.3.3 System Connections with Accessory Modules

See Figure 30 through Figure 34 for connection options to RBUS accessory modules. Note the cable shield connections shown in Figure 30.

Note:
Refer to the installation instructions provided with the automatic paralleling module (APM) for RBUS connections to the APM.

The maximum cable length depends on the number of RBUS modules connected. See the **Communications Cable Specifications** section for the maximum cable lengths with 1, to 4 modules per cable run.

Note:
A model RXT transfer switch with combined interface/ load management board acts as two RBUS modules: one RXT transfer switch and one load management device.

Power Relay Modules are not RBUS modules and do not add to the number of modules when determining the maximum cable length.

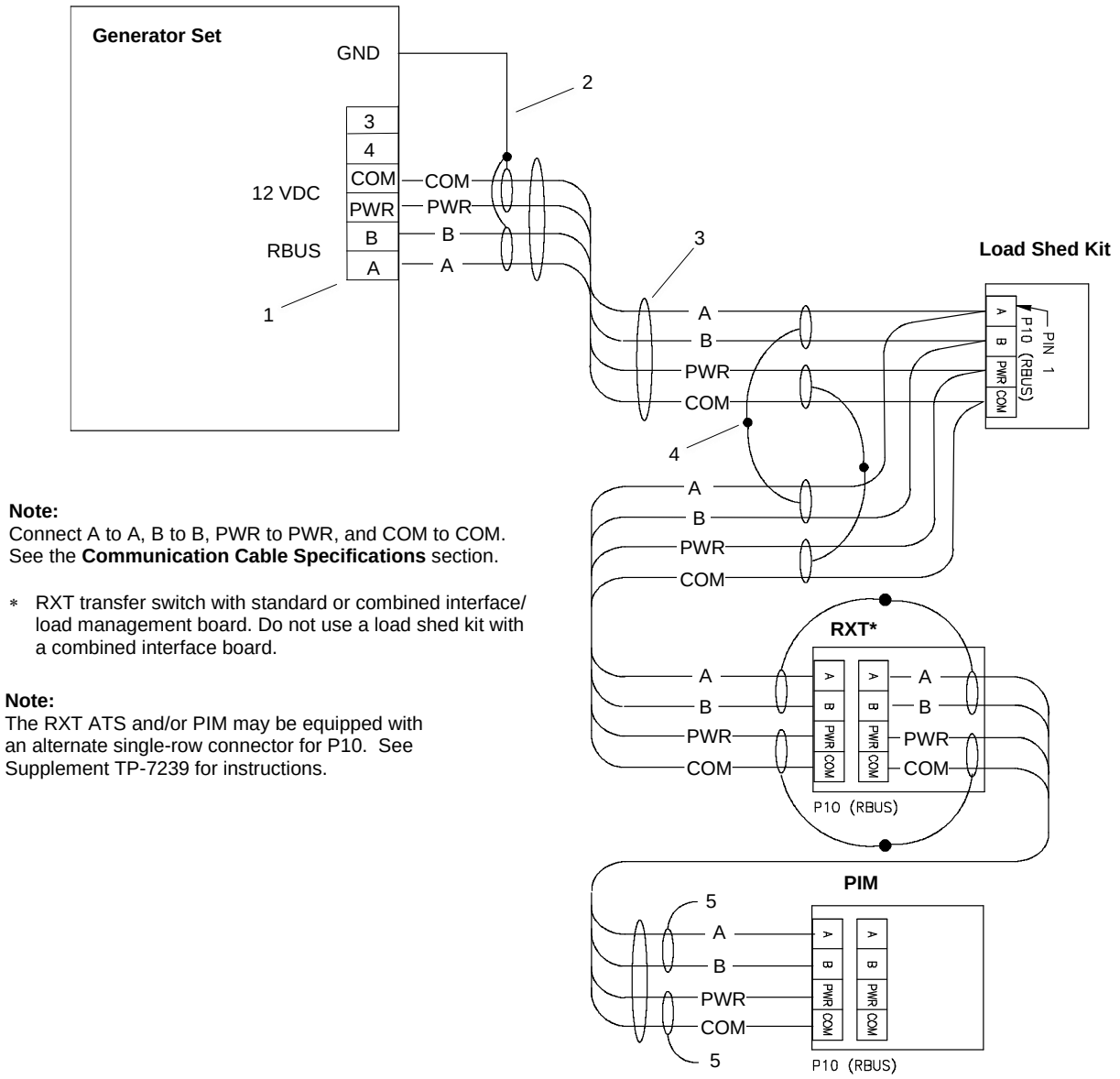

Note:
Connect A to A, B to B, PWR to PWR, and COM to COM. See the **Communication Cable Specifications** section.

* RXT transfer switch with standard or combined interface/ load management board. Do not use a load shed kit with a combined interface board.

Note:
The RXT ATS and/or PIM may be equipped with an alternate single-row connector for P10. See Supplement TP-7239 for instructions.

1. Generator set terminal block. Check the decal on the generator set for terminal block connections.
2. Connect one end of each cable shield to GROUND at the generator set.
3. Communication cable. See the **Communications Cable Specifications** section for cable specifications, including maximum total cable length.
4. Connect shields together as shown.
5. Leave one end of each cable shield disconnected at the last device.

Figure 30 Accessory Module Communication Connection Details

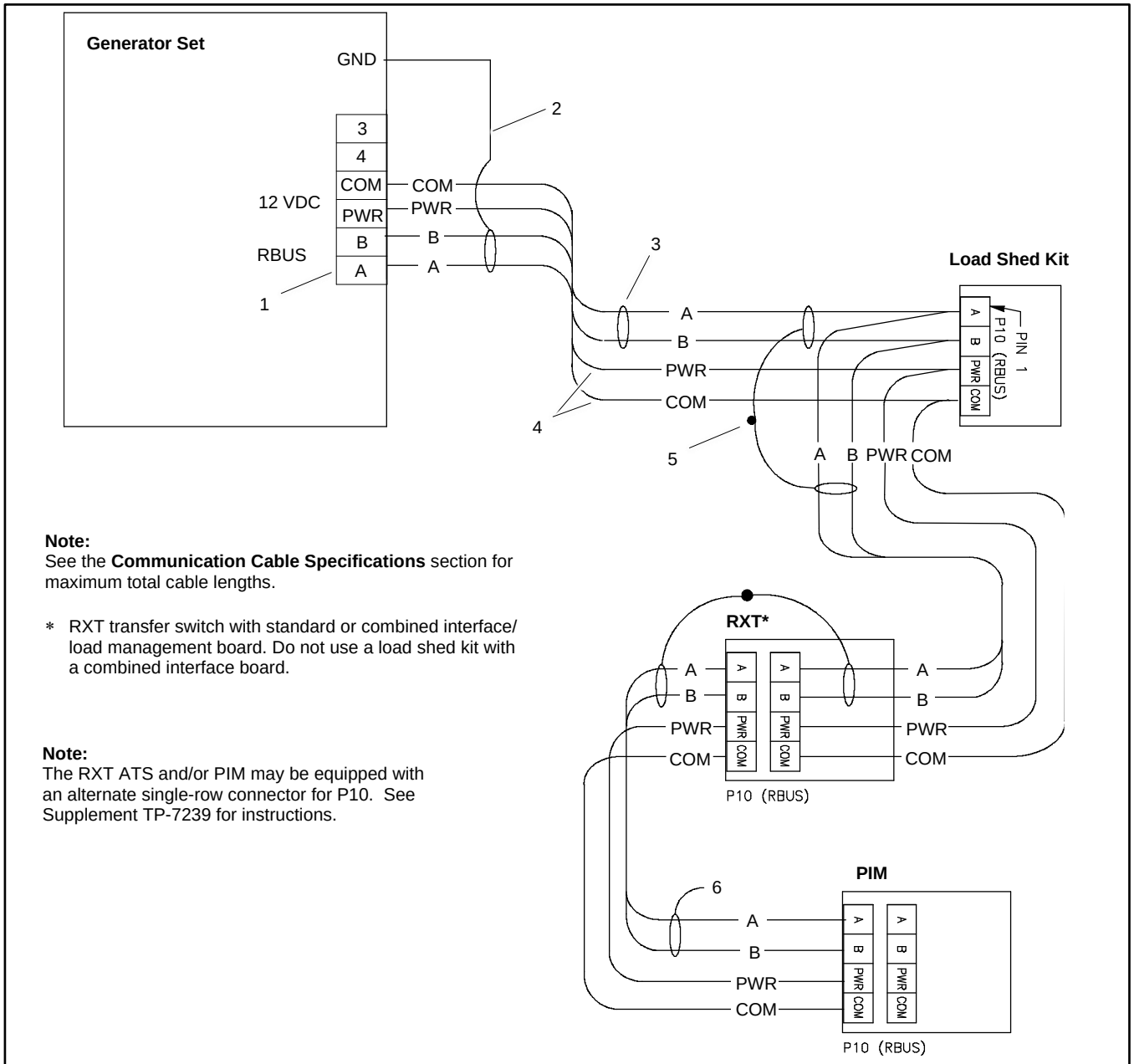

Note:
See the **Communication Cable Specifications** section for maximum total cable lengths.

∗ RXT transfer switch with standard or combined interface/ load management board. Do not use a load shed kit with a combined interface board.

Note:
The RXT ATS and/or PIM may be equipped with an alternate single-row connector for P10. See Supplement TP-7239 for instructions.

1. Generator set terminal block. Check the decal on the generator set for terminal block connections.
2. Connect one end of each cable shield to GROUND at the generator set.
3. Communication cable.
4. 12 AWG or 14 AWG leads for PWR and COM.
5. Connect shields together as shown.
6. Leave one end of the cable shield disconnected at the last device.

Figure 31 Accessory Module Connections with 12- 14 AWG Power Leads

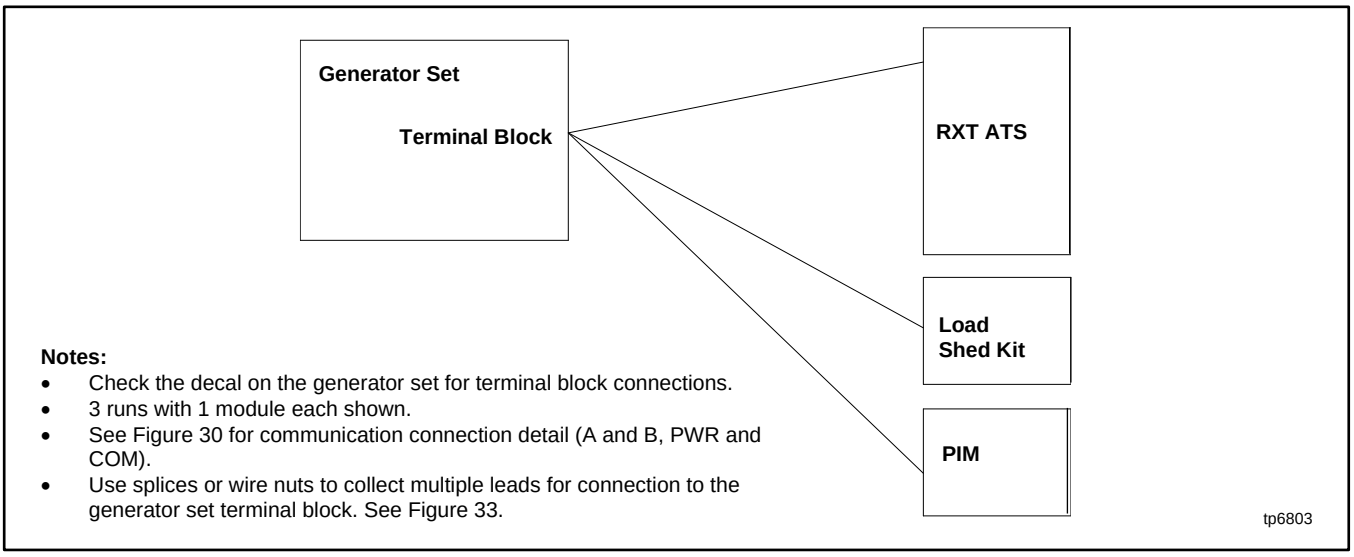

Figure 32 Accessory Module Connections (three cable runs with one module each)

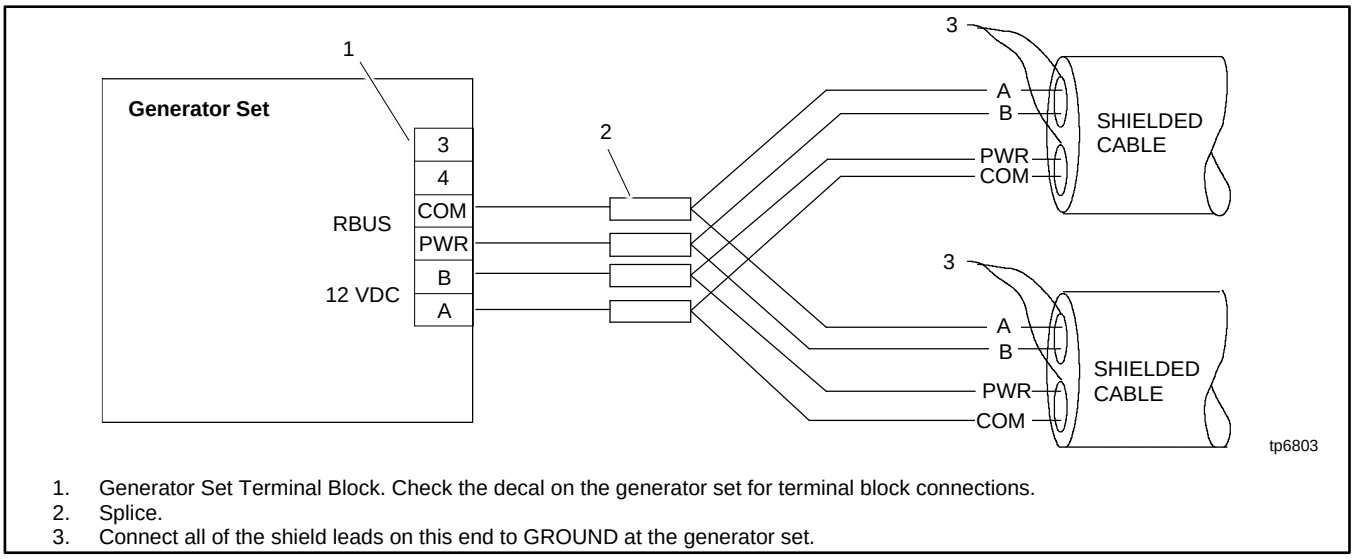

Figure 33 Multiple Connections to the Generator Set

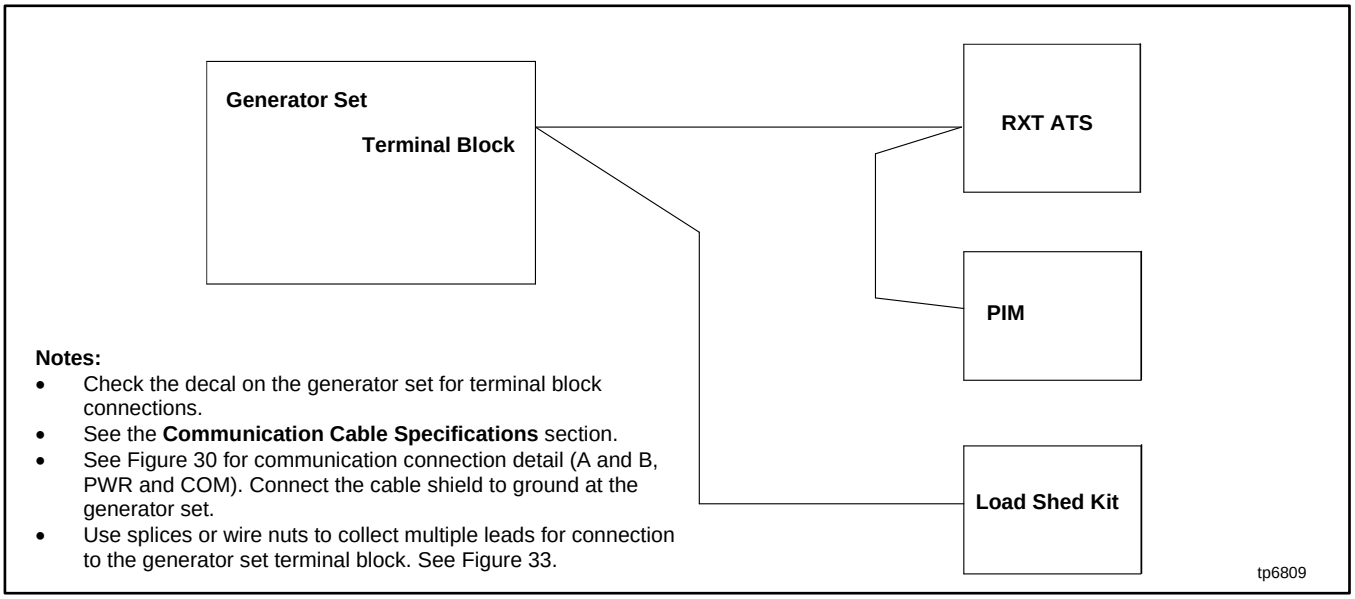

Figure 34 Accessory Module Connections (two cable runs with one and two modules shown)

4.1 Prestart Installation Check

DANGER	
	Hazardous voltage. Moving parts. **Will cause severe injury or death.** Operate the generator set only when all guards and electrical enclosures are in place.

WARNING	
	Carbon monoxide. **Can cause severe nausea, fainting, or death.** The exhaust system must be leakproof and routinely inspected.

Generator set operation. Carbon monoxide can cause severe nausea, fainting, or death. Carbon monoxide is an odorless, colorless, tasteless, nonirritating gas that can cause death if inhaled for even a short time. Avoid breathing exhaust fumes when working on or near the generator set. Never operate the generator set inside a building. Never operate the generator set where exhaust gas could seep inside or be drawn into a potentially occupied building through windows, air intake vents, or other openings.

Carbon monoxide symptoms. Carbon monoxide can cause severe nausea, fainting, or death. Carbon monoxide is a poisonous gas present in exhaust gases. Carbon monoxide is an odorless, colorless, tasteless, nonirritating gas that can cause death if inhaled for even a short time. Carbon monoxide poisoning symptoms include but are not limited to the following:

- Light-headedness, dizziness
- Physical fatigue, weakness in joints and muscles
- Sleepiness, mental fatigue, inability to concentrate or speak clearly, blurred vision
- Stomachache, vomiting, nausea

If experiencing any of these symptoms and carbon monoxide poisoning is possible, seek fresh air immediately and remain active. Do not sit, lie down, or fall asleep. Alert others to the possibility of carbon monoxide poisoning. Seek medical attention if the condition of affected persons does not improve within minutes of breathing fresh air.

Review the previous installation sections. Inspect all wiring and connections to verify that the generator set is ready for operation. Check all items in the following Prestart Checklist.

Prestart Checklist

Air Cleaner. Check that a clean air cleaner element is installed to prevent unfiltered air from entering the engine. See the generator set operation manual for instructions.

Air Inlets. Check for clean and unobstructed air inlets.

Battery. Check for tight battery connections. Consult the battery manufacturer's instructions regarding battery care and maintenance.

Enclosure. Check that all enclosure panels and internal baffling are in place.

Exhaust System. Check for exhaust leaks and blockages. Check the muffler condition.

1. Inspect the exhaust system components for cracks, leaks, and corrosion. Check for tight exhaust system connections.
2. Check for corroded or broken metal parts and replace them as needed.
3. Check that the exhaust outlet is unobstructed.

Oil Level. Maintain the oil level at or near, not over, the full mark on the dipstick.

Operating Area. Check for obstructions that could block the flow of cooling air. Keep the air intake area clean. Do not leave rags, tools, or debris on or near the generator set.

4.2 Set the Exerciser

Set the exerciser to automatically run the generator set on the desired day and time every week or every two weeks or every month. See the generator set Operation Manual for detailed descriptions of the exercise operation.

4.2.1 Setting the Exerciser

When power is applied to the RDC2 controller (when the battery or the utility power for the battery charger is connected), you will be prompted to set the date and time, and then to set the exerciser.

The first setting will flash. Press the Up and Down arrow buttons to change the setting. Press Select to save the setting and move on to the next. Repeat until the date, time, and exercise are set and the controller display shows the main menu. See the generator set Operation Manual for more detailed instructions to set the date and time and set the exerciser.

Press AUTO to place the generator set controller into automatic mode.

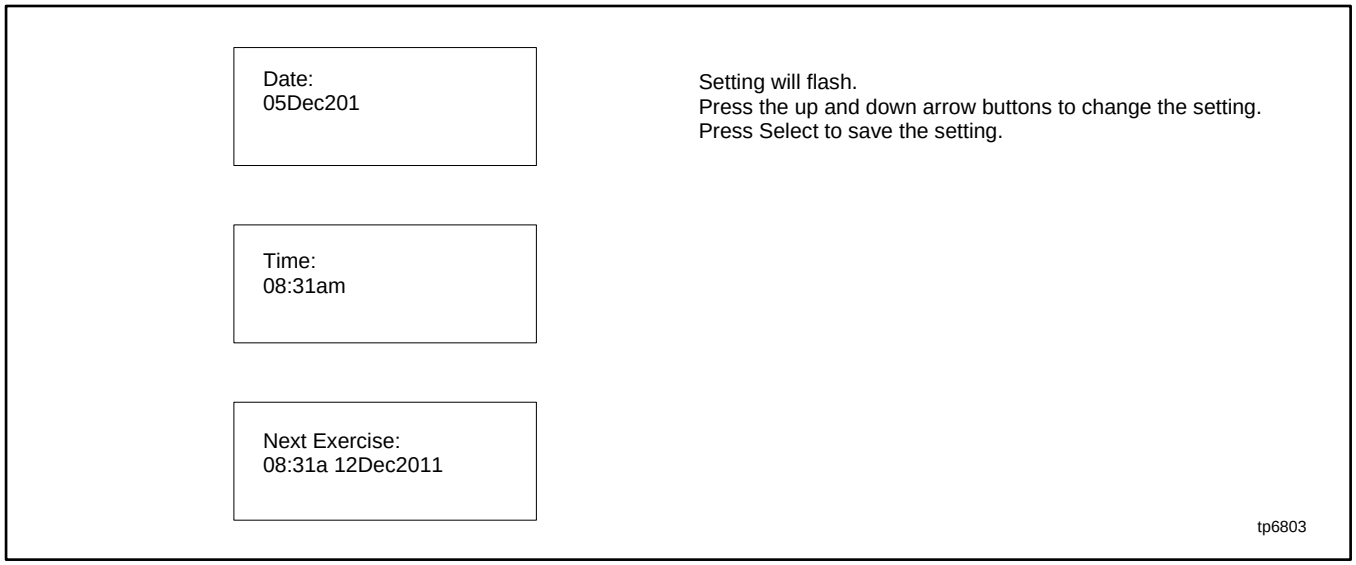

Figure 35 Set Time, Date, and Exercise

4.2.2 Loaded Exercise

In order to set a loaded exercise using the RDC2 controller, a Kohler® Model RXT transfer switch must be connected. See the generator set operation manual for instructions to set a loaded exercise.

To set a loaded exercise on a generator set connected to a transfer switch other than a Model RXT, use the transfer switch controller to set the exercise. Refer to the transfer switch operation manual for instructions.

5.1 Introduction

This section describes some of the accessories that are available for the generator sets. Have accessories installed by an authorized dealer or a licensed electrician. This document does not contain installation instructions for accessories. Follow the installation instructions provided with each kit.

Use separate conduit for AC and DC leads to reduce the possibility of electrical interference. Verify that the leads and conduit do not interfere with the operation of the generator set or obstruct the service areas. Verify that the electrical installation complies with the National Electrical Code (NEC) and all applicable local codes. See the wiring diagrams in the **Drawings and Diagrams** section for more information regarding generator set electrical connections.

5.2 Carburetor Heater

WARNING	
	Hot engine and exhaust system. **Can cause severe injury or death.** Do not work on the generator set until it cools.

Servicing the engine heater. Hot parts can cause minor personal injury or property damage. Install the heater before connecting it to power. Operating the heater before installation can cause burns and component damage. Disconnect power to the heater and allow it to cool before servicing the heater or nearby parts.

A carburetor heater is recommended for improved cold starting in locations where the ambient temperature drops below 0°C (32°F). The carburetor heater prevents condensation and carburetor icing. The heater turns on when the temperature at the thermostat falls below approximately 4°C (40°F) and turns off when the temperature rises above approximately 16°C (60°F). The carburetor heaters are shown in Figure 37.

To install the carburetor heater, follow the instructions provided with the kit. Figure 38 shows the installed carburetor heater kit installed for a 14 kW generator set. Figure 39 shows the location for the carburetor heater kit on an 20/26 kW generator set.

Note:
The breather tube heater and oil heater kit cannot be used with a carburetor heater.

Verify that AC power is connected to the generator set as described in the **Electrical Connections** section. Make sure that the circuit is backed up by the generator set to provide power at all times.

The heater thermostat is installed in the cord. Figure 37 shows the location of the thermostat on the power cord. The heater power cord and thermostat are located in the generator set housing air intake area/ battery compartment.

For 120 volt models, plug the carburetor heater into the 120 VAC receptacle provided. 240 volt kits use a 3-pin power connector. Knockouts are provided for the 240 V plugs. See Figure 40 and follow the instructions provided with the heater kits.

Kit Number	120 Volt Kits	240 Volt Kits
Voltage	120 VAC 50/60 Hz	240 VAC/60 Hz 230 VAC/50 Hz
Thermostat ON	4 ± 4°C (40 ± 7°F)	
Thermostat OFF	16 ± 3°C (60 ± 5°F)	

Figure 36 Carburetor Heater Specifications

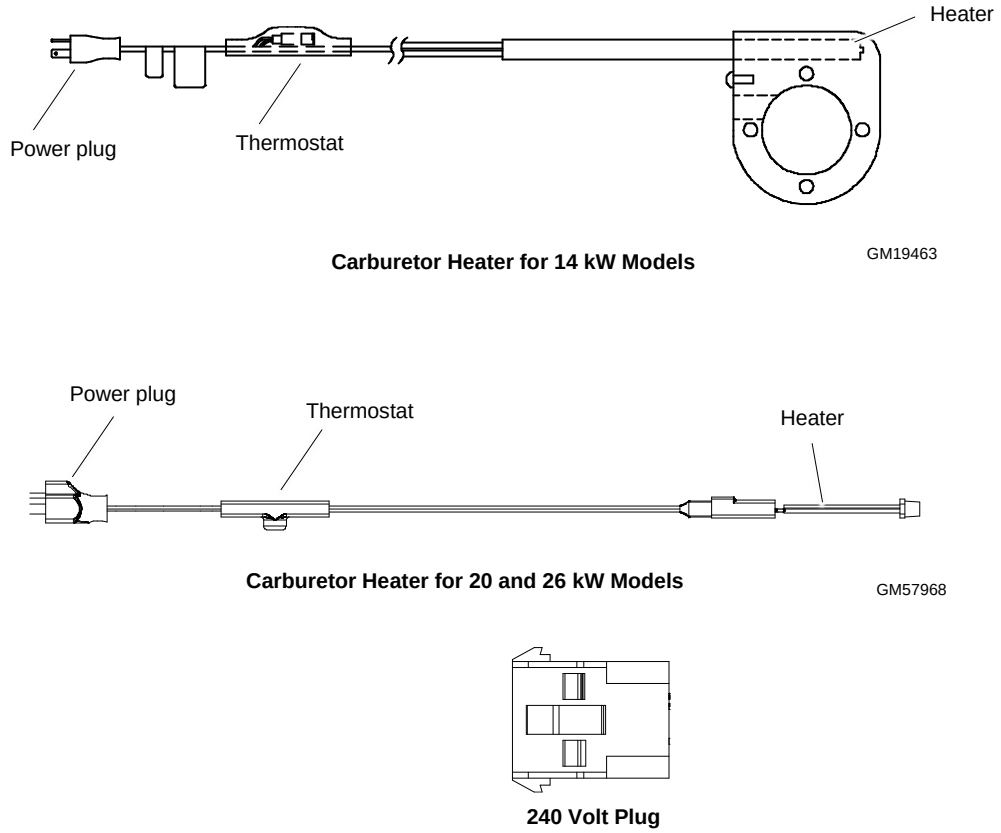

Figure 37 Carburetor Heaters

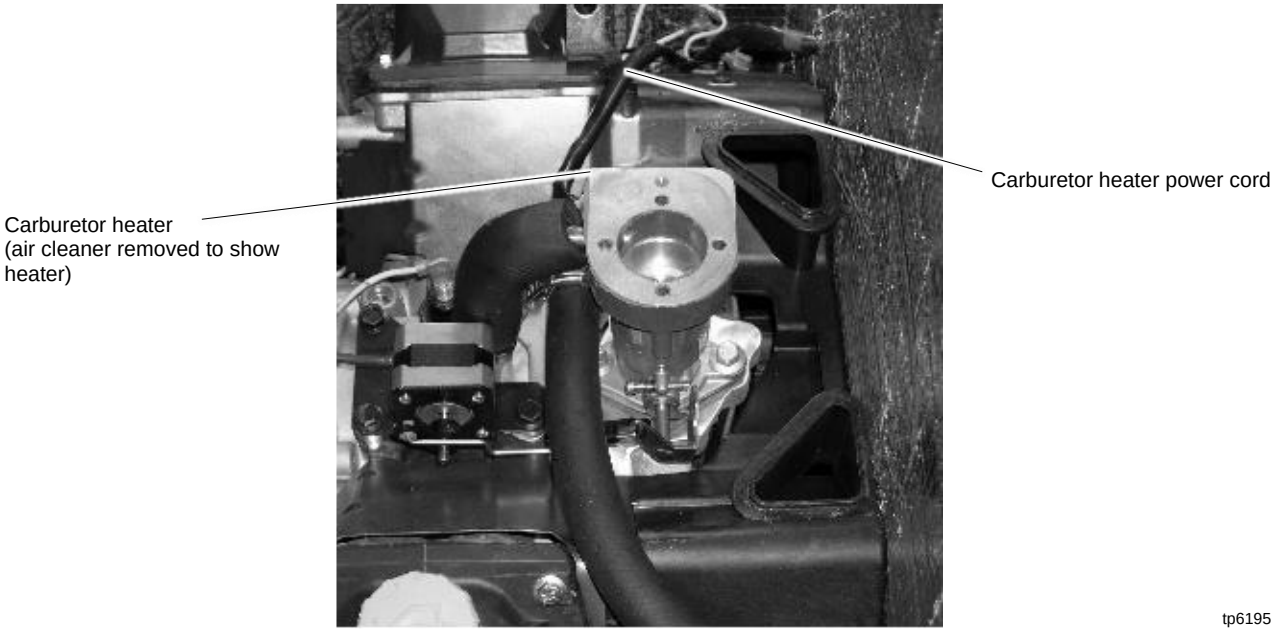

Figure 38 Carburetor Heater for 14 kW Models

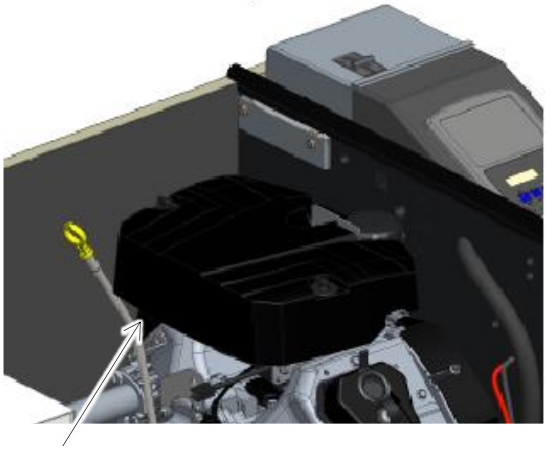

adv-8954

Carburetor heater location under air cleaner. Insert from the back of the generator set.

Carburetor heater

tt1482b

20 kW Model

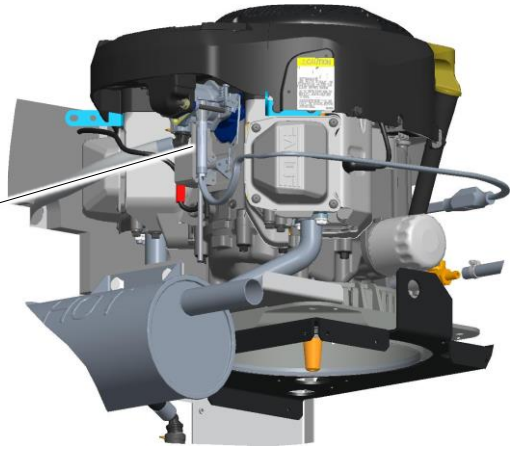

26 kW Model

Figure 39 Carburetor Heater Location on 20 and 26 kW Models

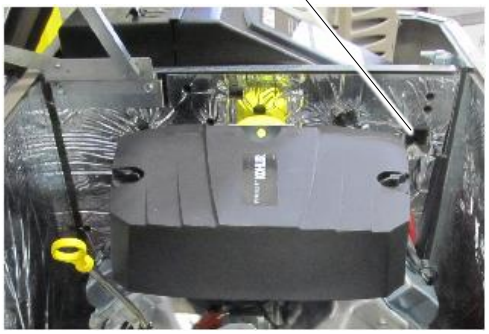

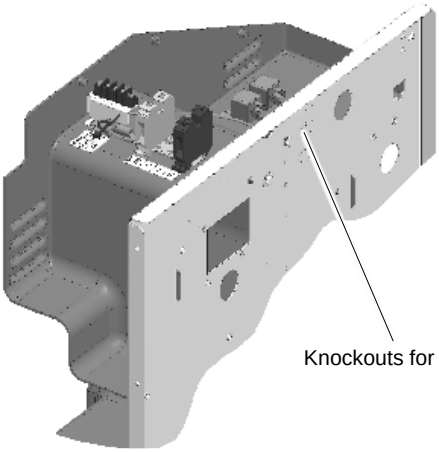

Figure 40 Power Connections for Carburetor Heaters

5.3 Programmable Interface Module (PIM)

The optional programmable interface module (PIM) shown in Figure 41 provides two programmable inputs and six dry contact outputs, four of which are programmable. See TT-1584 for PIM installation and connection instructions. Also see the **ATS and Accessory Communication Connections** section of this manual for connection to the generator set.

The default settings for the inputs and outputs are shown in Figure 42. To change the input and output settings, use a personal computer running Kohler® SiteTech™ software. See TP-6701, SiteTech Software Operation Manual, for instructions. SiteTech is available to Kohler-authorized dealers.

Outputs 3 through 6 can also be controlled remotely using the OnCue® Plus program. If an output is activated or deactivated through OnCue Plus, it is no longer controlled by the RDC2 controller. Kohler SiteTech software can be used to set the outputs back to generator-controlled events, if necessary. See the OnCue Plus manuals for instructions.

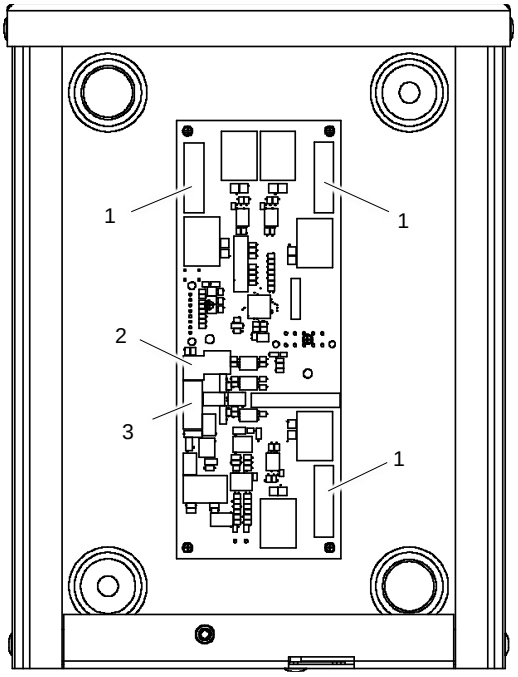

1. Output connections (3 terminal blocks, 6 outputs).
2. Input connections (2 inputs).
3. RBUS communication connection to generator set terminal block TB2.

Figure 41 Optional PIM

PIM Connection	Factory Default Setting
Input 1	None
Input 2	None
Output 1 (Relay 1)	Run
Output 2 (Relay 2)	Common Fault
Output 3 (Relay 3)	Low Battery Voltage (Programmable)
Output 4 (Relay 4)	Not in Auto (Programmable)
Output 5 (Relay 5)	Cooldown (Programmable)
Output 6 (Relay 6)	Normal Source Failure (Programmable)

Figure 42 PIM Inputs and Outputs

5.4 OnCue Plus Generator Management System

The OnCue® Plus Generator Management System allows monitoring and control of your generator set from a personal computer, smart phone, or tablet. OnCue Plus can also be configured to send email or text message notifications in the event of a generator set fault. See the OnCue Plus Manuals for instructions.

OnCue Plus

OnCue Plus is provided with the generator set. Purchase and install the OnCue Plus Wireless kit, or use category 5E network cable to connect the RDC2 controller to the customer-supplied Ethernet router or modem. Route the cable with other low-voltage signal wiring (for example, the RBUS communication leads or engine start leads to the transfer switch), in separate conduit from the AC load leads. If the network cable is longer than 100 meters (328 ft.), use a repeater or switch.

Recommended: Use a laptop computer to verify the network connection before connecting to the generator set.

Checking the network connection

1. Check for and turn OFF any wireless connections to the laptop.
2. Connect the network cable to the laptop. Connect the other end of the network cable to the customer's router or modem.
3. Verify the Internet connection by opening your web browser and going to www.kohlerpower.com or any known website.
4. After verifying the connection through the network cable, disconnect the network cable from the laptop and turn the laptop wireless connections back on.

Connect to the Ethernet cable in the customer connection area of the generator set. See Figure 43. Use an RJ45 inline coupler, provided with the OnCue Plus kit, to connect the customer's Ethernet cable to the cable in the customer connection box.

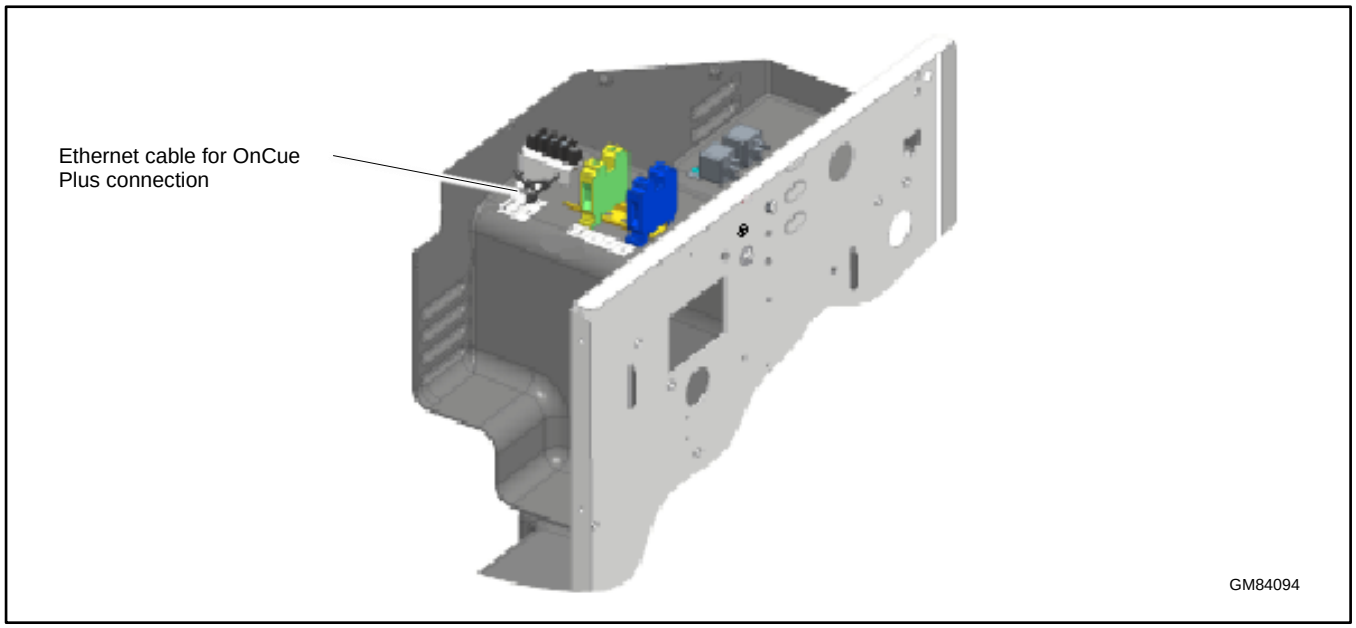

Figure 43 Network Connection for OnCue Plus

5.5 Load Management Devices

Two optional load management devices are available for use with single-phase generator sets and a model RXT or RDT transfer switch:

1. The optional Load Shed Kit mounts inside a Model RDT or RXT transfer switch. Figure 44 shows the load shed assembly.
2. The combined interface/ load management board is available for the Model RXT transfer switch.

The devices provide an automatic load management system designed to comply with applicable NEC requirements (ref. article 702 for Optional Standby Systems). The installer is responsible for ensuring that the power system installation complies with all applicable state and local codes.

Note:
The load management devices are only compatible with single-phase generator sets.

With a load management system, less critical appliances can be powered by the generator set when the more important appliances are not running, allowing the use of a smaller generator set than would be needed to run all of the building's electrical equipment at the same time.

The load shed kit or combined interface/ load management board can be used to automatically manage up to six residential loads:

1. Up to four normally closed power relays can be connected through normally open relay contacts on the circuit board. See the load shed kit installation instructions for relay specifications. Kohler® Power Relay Modules are recommended.
2. Two relays are included on the load management device to control two independent heating, ventilation, and air conditioning (HVAC) loads.

Note:
Connect only non-essential loads to the load shed kit.

The load management device receives commands from the RDC2 generator controller and energizes or de-energizes the appropriate load relays to add or shed non-critical loads according to their priority.

An adequate electrical supply is required for operation of the power relays connected to the load shed kit. Check the electrical requirements of the connected equipment prior to installation to determine the wire size and circuit protection required. Verify that customer-provided equipment complies with applicable local and national electrical codes.

For detailed installation and connection instructions, see the installation instructions provided with the load shed kit or the Operation/Installation Manual for the Model RXT transfer switch.

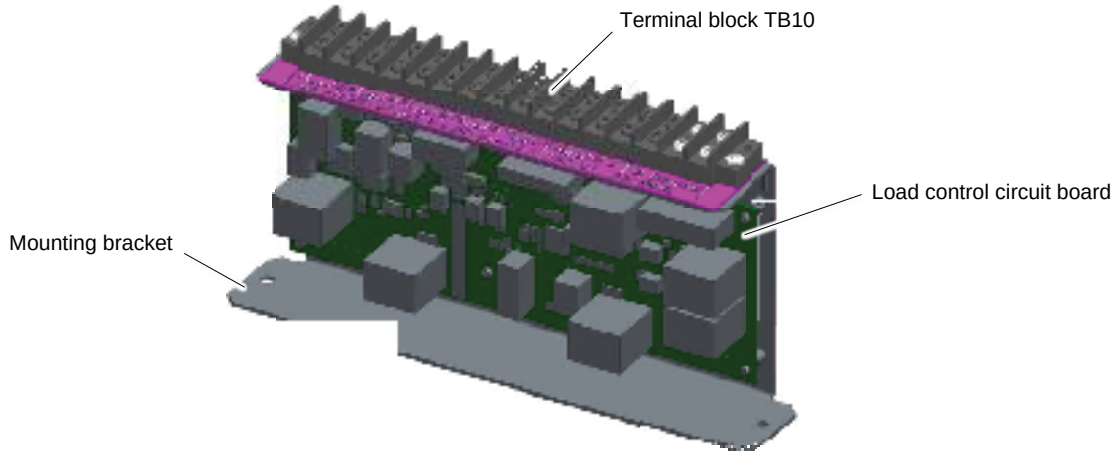

Note:
Kit includes current transformer (CT), not shown.

GM88281

Figure 44 Load Shed Assembly GM88281-1 (mounts inside the transfer switch enclosure)

5.5.1 Power Relay Module

The power relay module kit contains one 50 amp normally closed relay with connecting lugs in a NEMA type 3R enclosure. Connect up to four (4) power relay modules to the load management devices listed above.

The power relay modules can be mounted indoors or outdoors. Two (2) 120 VAC loads (shed simultaneously) or a single 240 VAC load can be wired to each relay.

For detailed installation and connection instructions, see the installation instructions provided with the power relay module kit.

Figure 45 Power Relay Module

5.6 PowerSync Automatic Paralleling Module (APM)

The PowerSync® Automatic Paralleling Module (APM) allows the use of two Model 14RCA or two 20RCA generator sets in a single-phase paralleling system to supply power to one building or site. See Figure 46.

The APM provides a common connection point for paralleling generators and permits individual control of the generator connections, allowing for synchronization, redundancy, and generator management.

Generator management provides these features and benefits:

1. Generator management runs one generator set when power requirements are low, and automatically starts, synchronizes, and connects the second generator set when the load increases.
2. Longer generator life: Smart generator management automatically operates the generator with the lowest operating hours first, splitting the run time evenly between the two generator sets and extending the life of both units.
3. Redundancy: If one generator set requires service or even fails, the other generator set is still available to provide power to your critical electronics.
4. Dual fuels: Allows operation of one generator set on natural gas and the other on LPG, if desired.
5. Simultaneous exercise: Setting the exercise time and date on one generator set schedules both generator sets to exercise at the same time.
6. Power during generator service: Customer override allows maintenance or service to one generator set while the other continues to run.

The following combinations of single-phase generator sets can be paralleled:

1. Two single-phase model 14RCA generator sets with the 120/240 volt single-phase configuration.
2. Two single-phase model 20RCA generator sets with the 120/240 volt single-phase configuration.

Automatic paralleling requires:

1. Two single-phase generator sets as described above.
2. APM RDC2.4 paralleling firmware for the blue-board controller on each generator set. Download the latest version of paralleling firmware from the Service Support section of the Kohler Power Resource Center (KPRC).
3. One Model RXT automatic transfer switch (ATS).
4. One Automatic Paralleling Module (APM) kit.
5. A personal computer (laptop) with Kohler® SiteTech™ software is required for system setup.
6. A load management device is **required** if one generator set cannot support the maximum total load.

The load management device (load shed kit or RXT combined interface/ load management board) is necessary in order to shed non-critical loads in the event that one generator set shuts down and the other generator set cannot support all of the loads.

See TT-1596, provided with the APM, for complete installation instructions. The APM and associated equipment must be installed by a Kohler® trained and authorized dealer.

If the APM is not installed within sight of the generator sets, local codes may require the installation of circuit breakers near the APM. Circuit breaker kits are available for installation inside the APM enclosure. See TT-1596 for the circuit breaker kit numbers.

zab26291

Figure 46 PowerSync® Automatic Paralleling Module

5.7 Cold Weather Package

The cold weather package is recommended for reliable operation at temperatures below 0°C (32°F). The cold weather package includes the kits shown in the following sections. The kits shown below are also available separately.

WARNING	
	Hot engine and exhaust system. **Can cause severe injury or death.** Do not work on the generator set until it cools.

Servicing the engine heater. Hot parts can cause minor personal injury or property damage. Install the heater before connecting it to power. Operating the heater before installation can cause burns and component damage. Disconnect power to the heater and allow it to cool before servicing the heater or nearby parts.

5.7.1 Battery Heater

Optional 120 VAC and 240 VAC battery heater kits are available. The heater is thermostatically controlled. See Figure 47.

Wrap the heater around the battery and secure the cord using the strap or cable ties provided with the kit. See Figure 48. Plug the power cord into an AC receptacle.

240 volt kits use a 3-pin power connector. Knockouts are located in the bulkhead for the 240 VAC power connector. The 240 volt battery heater kit includes an adapter harness that allows connection of up to three accessories.

Battery Heater Specifications		
Heater Part Number	**GM103782**	**GM118787**
Heater wrap voltage	100-120 VAC or 200-240 VAC 50/60 Hz	120 VAC 50/60 Hz
Heater wrap rating, Watts	50	
Thermostat temperatures: On Off	 16°C (60°F) 27°C (80°F)	
Battery wrap length, mm (in.)	864 (34)	
Power cord length, mm (in.)	1830 (72)	483 (19)

Figure 47 Battery Heater Specifications

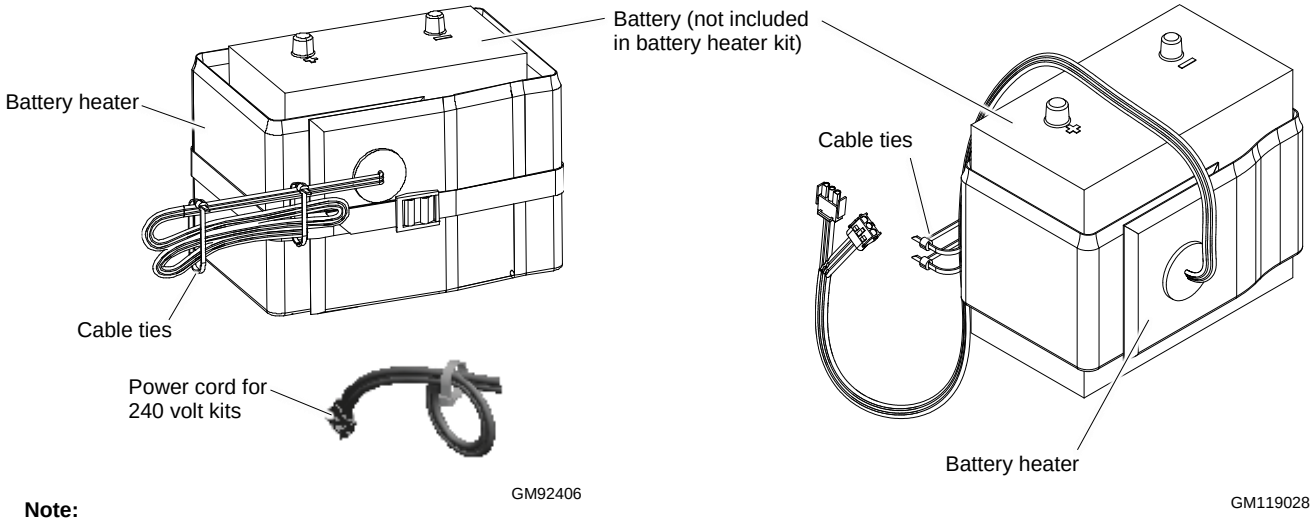

Note:
Adapter harness for multiple accessories not shown.

Figure 48 Battery Heater, typical

Battery Heater Connection (26 RCA/L Models)

Connect one end of the battery heater cable to the wire harness at P21. See the Drawings and Diagrams section for the connection details.

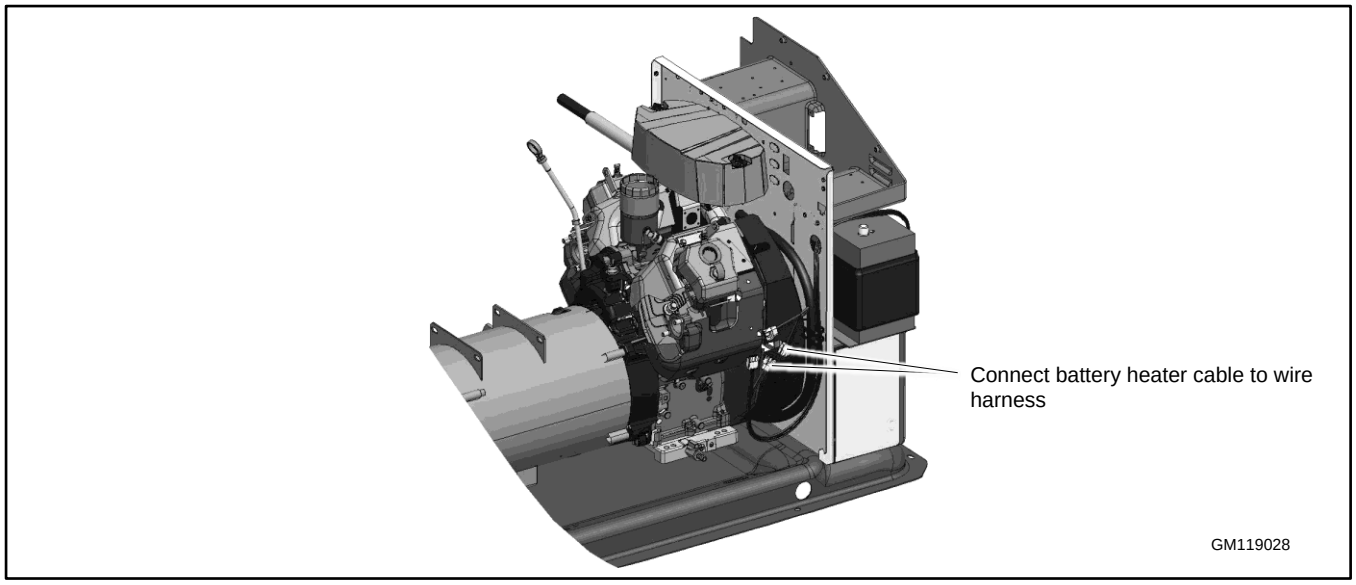

Figure 49 Battery Heater Connection, 26 RCA/L

5.7.2 Breather Tube and Oil Heater

The breather tube heater and oil heater kit is recommended for improved cold starting in locations where the ambient temperature drops below 0°C (32°F).

Note:
The heaters require a continuous source of AC power. See Figure 50 and Figure 51 for the power supply voltage required.

Note:
The breather tube heater and oil heater must be used together.

Note:
The breather tube heater and oil heater kit cannot be used with a carburetor heater.

Verify that AC power is connected to the generator set as described in the generator set Installation Manual. The circuit must be backed up by the generator set to provide power at all times. Refer to TT-1709 for instructions to install the heaters and connect 120VAC power.

See Figure 52 and Figure 53 for illustrations of the 120 VAC breather tube heater and oil heater.

Heater Part Number	GM110893, GM110894, and GM118784
Voltage	120 VAC
Thermostat ON	4°C (40°F)
Thermostat OFF	13°C (55°F)

Figure 50 Breather Tube Heater Specifications

Heater Part Number	GM110895, GM110896, and GM118786
Voltage	120 VAC
Thermostat ON	4°C (40°F)
Thermostat OFF	13°C (55°F)

Figure 51 Oil Heater Specifications

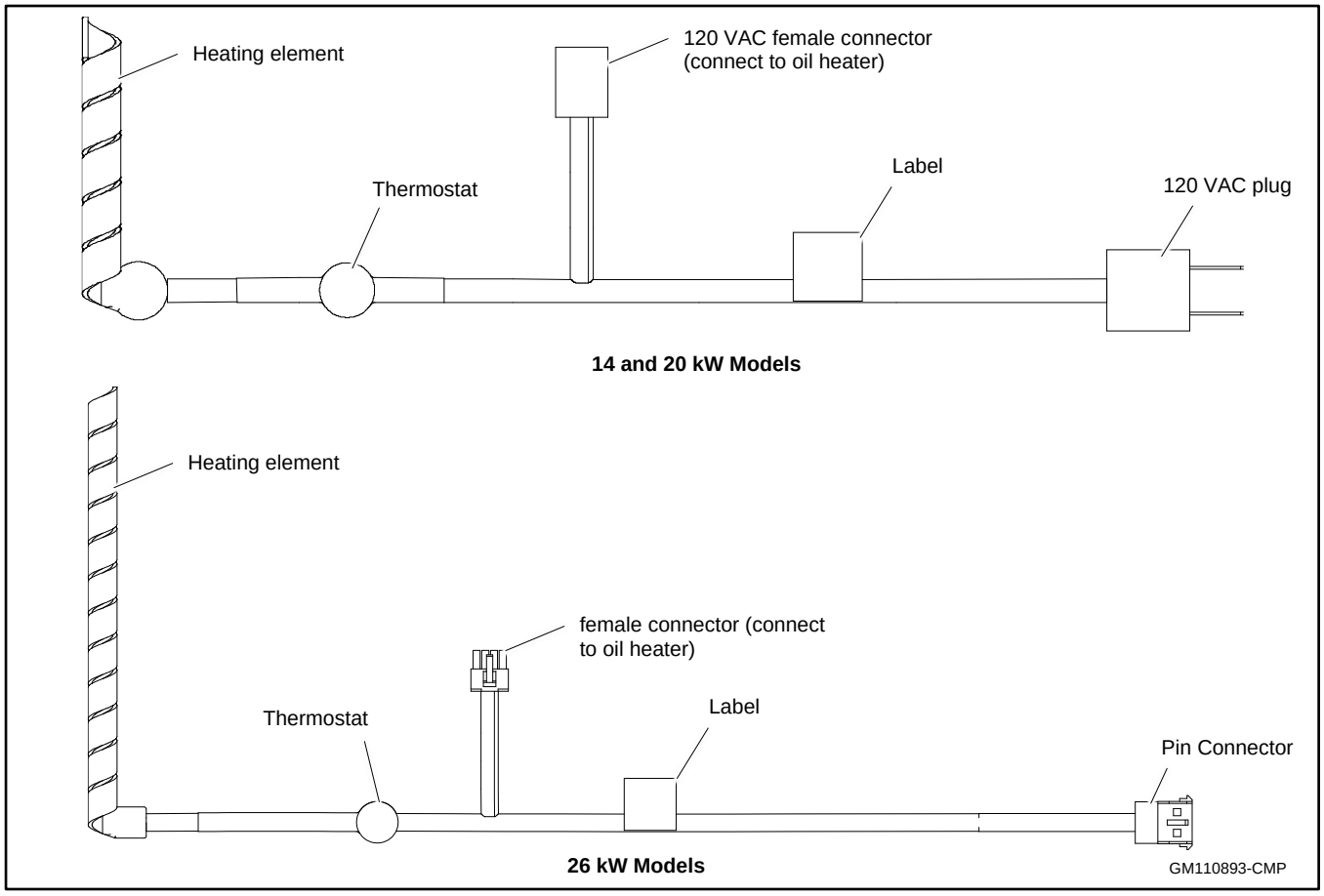

Figure 52 Breather Tube Heater

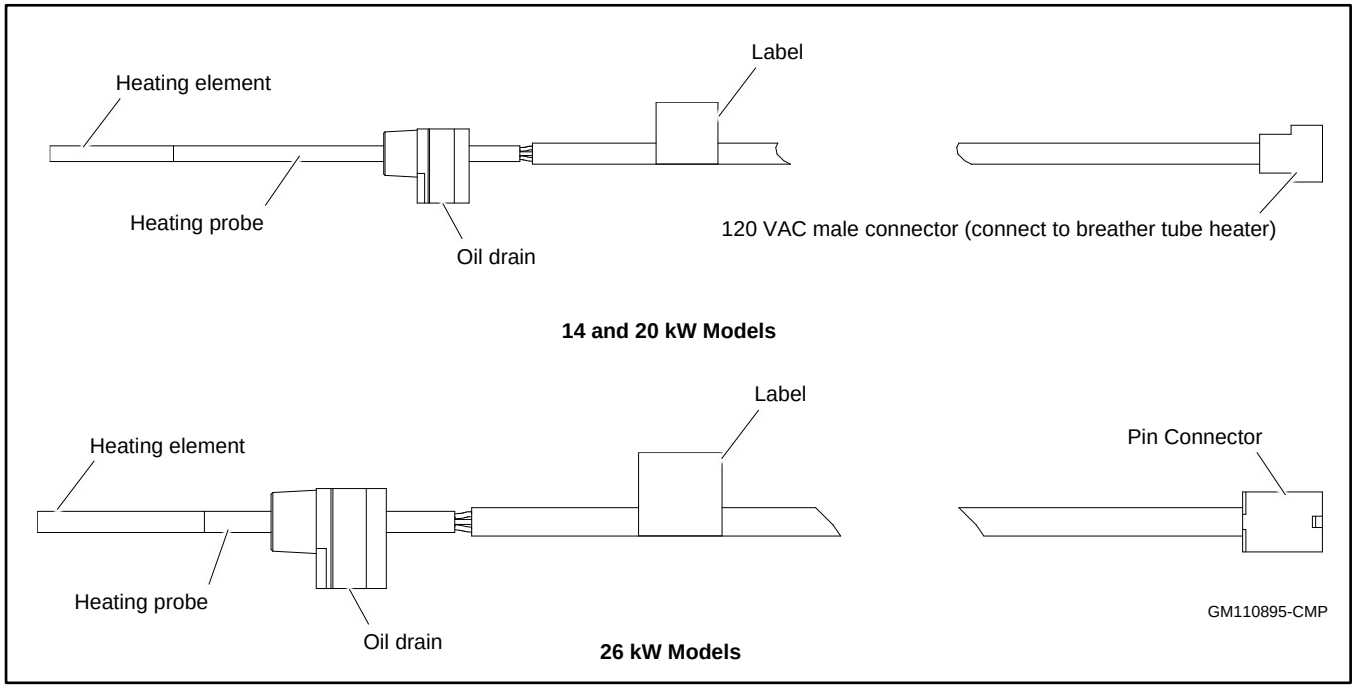

Figure 53 Oil Heater

Note:
For Models 14RCA(L): If the generator set is equipped with a carburetor heater, obtain kit GM102228-S to replace the breather tube, air cleaner spacer, and gaskets before installing the breather tube and oil heaters.

If the generator set is equipped with a carburetor heater, remove it before installing the breather tube and oil heaters.

The breather tube heating element wraps around the breather tube from the engine to the air cleaner.

Before installing the oil heater kit, drain the oil from the engine. Insert the oil heater near the oil drain valve using the coupling provided in the kit. Connect the oil heater power cord to the breather tube heater cord.

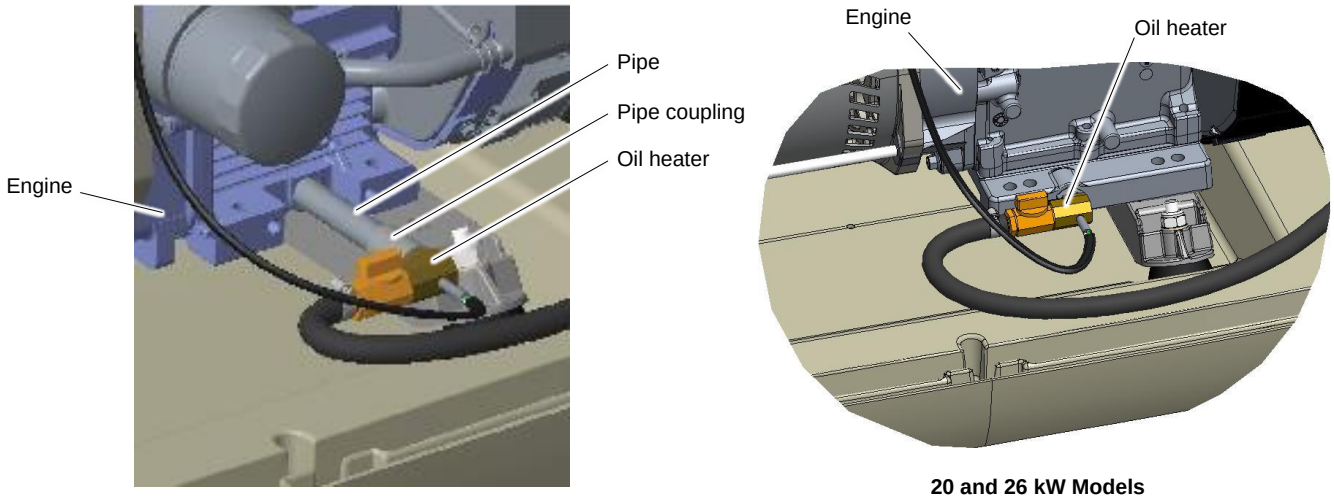

Figure 54 Oil Heater, Typical

5.7.3 Fuel Regulator Heater (20 and 26 kW models only)

An optional fuel regulator heater is recommended for models 20RCA/L and 26RCA/L for improved cold starting in locations where the ambient temperature drops below -18°C (0°F). The heater requires a continuous source of AC power.

Heater Part Number	GM79142	GM118785
Heater rating	120 VAC, 60 W	
Thermostat	4°C/13°C (40°F/55°F) Snap action	
Pad diameter	127 mm (5 in.)	
Cord length	914 mm (36 in.)	585 mm (23 in.)

Figure 55 Regulator Heater Kit Specifications

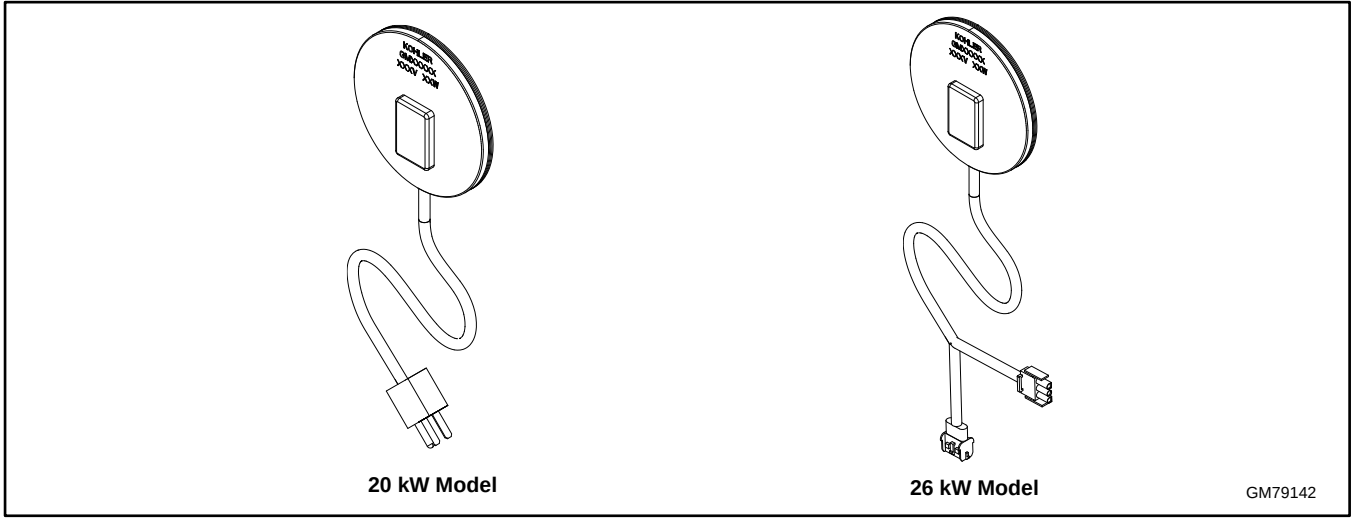

Figure 56 Fuel Regulator Heater Pad

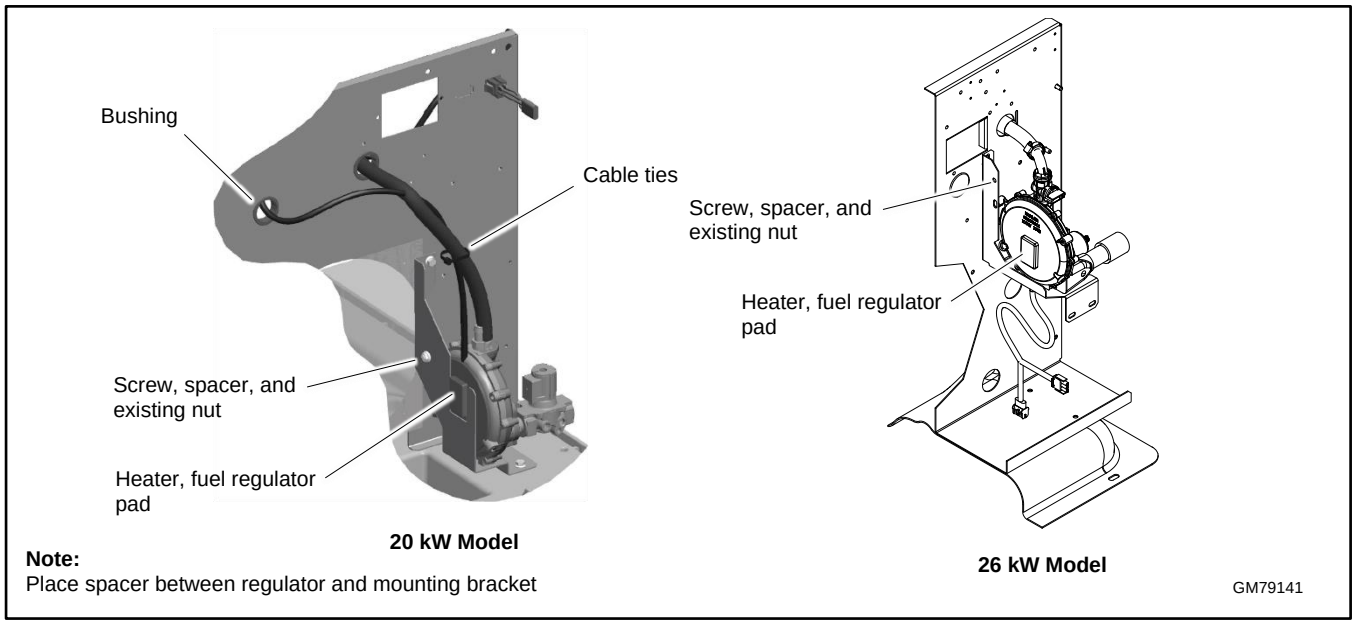

Figure 57 Fuel Regulator Heater Installation, 20RCA/L and 26RCA/L

Fuel Regulator Heater Connection (26 RCA/L Models)

1. Disconnect the receptacle harness from connector P20. See Figure 58.
2. Connect one end of the regulator heater cable to P20 and the other end to the receptacle harness.

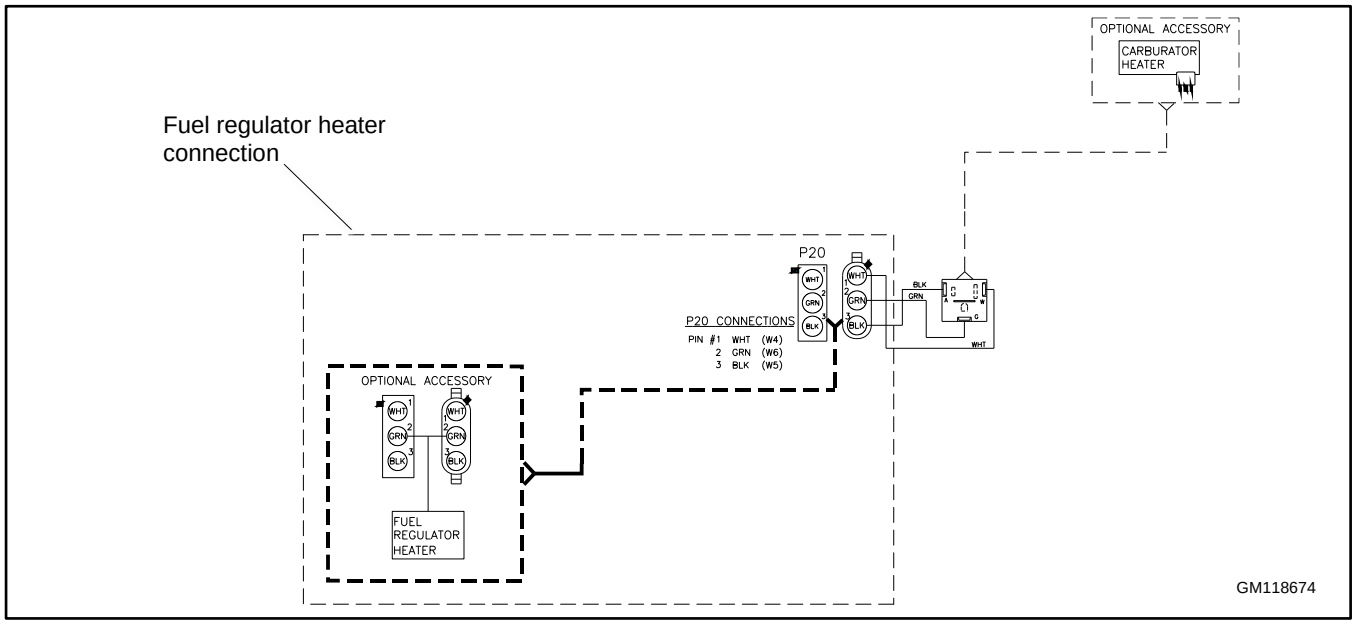

Figure 58 Fuel Regulator Heater Connection, 26RCA/L

5.7.4 Alternator Weather Cover

The alternator weather cover is used to prevent frost and snow build up on the alternator brushes. The alternator weather cover is not applicable to the 26RCA/L generator set.

Follow the instructions provided with the kit to install the alternator weather cover onto the alternator end bracket. See Figure 59.

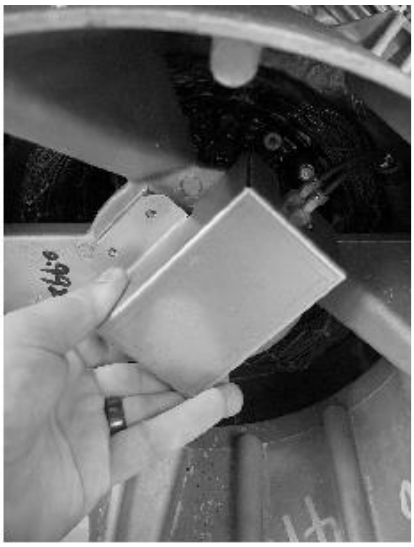

IMG_1055

Figure 59 Alternator Weather Cover

5.7.5 Oil Pressure Sensor Boot

The oil pressure sensor boot protects the oil pressure sensor and its connection from moisture and frost buildup that can cause false low oil level faults. Install the oil pressure sensor boot in locations where the ambient temperature drops below 0°C (32°F). See Figure 60 for illustrations of the installed kit. Follow the instructions provided with the kit to install the boot.

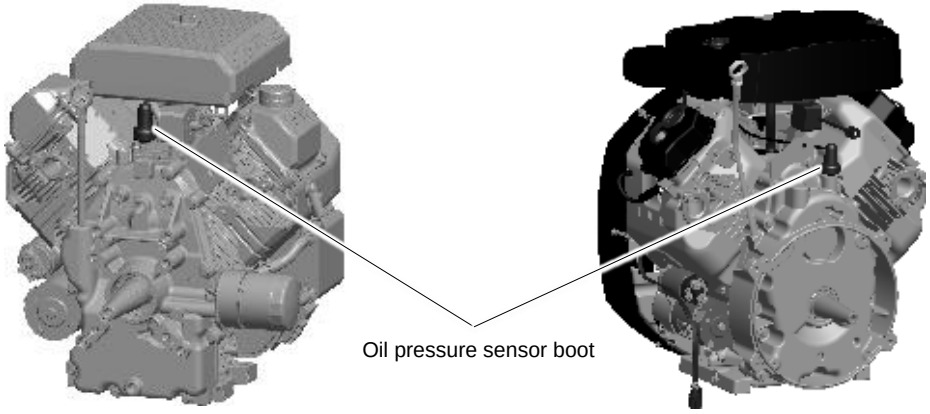

14 kW Models **20 and 26 kW Models**

GM102176

Figure 60 Oil Pressure Sensor Boot Location

Figure 61 lists the drawing numbers and page numbers.

Dimension Drawings	Drawing No.	Page No.
Dimension Drawing: 14/20RCA/L	ADV-9746	
Dimensions	Sheet 1	62
Maintenance item locations	Sheet 2	63
Maintenance item locations	Sheet 3	64
Location and clearance requirements, single unit	Sheet 4	65
Location and clearance requirements, parallel units	Sheet 5	66
Dimension Drawing: 26RCA/L	ADV-9919-B	
Dimensions	Sheet 1	67
Maintenance item locations	Sheet 2	68
Maintenance item locations	Sheet 3	69
Location and clearance requirements, single unit	Sheet 4	70
Location and clearance requirements, parallel units	Sheet 5	71
Wiring/Schematic Diagrams		
Schematic Diagram: 14/20RCA/L	ADV-9236-A	
Harnesses and cables	Sheet 1	72
1 phase, 2 pole circuit breaker	Sheet 2	73
1 phase, 1 pole circuit breaker	Sheet 3	74
3 phase, 3 pole circuit breaker	Sheet 4	75
Schematic Diagram: 26RCA/L	ADV-9909	
Harnesses and cables	Sheet 1	76
1 phase, 2 pole circuit breaker	Sheet 2	77
1 phase, 1 pole circuit breaker	Sheet 3	78
3 phase, 3 pole circuit breaker	Sheet 4	79
Wiring Diagram: 14/20RCA/L	GM115458-A	
1 phase, 2 pole circuit breaker	Sheet 1	80
1 phase, 1 pole circuit breaker	Sheet 2	81
3 phase, 3 pole circuit breaker	Sheet 3	82
Wiring Diagram: 26RCA/L	GM118674	
1 phase, 2 pole circuit breaker	Sheet 1	83
1 phase, 1 pole circuit breaker	Sheet 2	84
3 phase, 3 pole circuit breaker	Sheet 3	85

Figure 61 Drawings and Diagrams

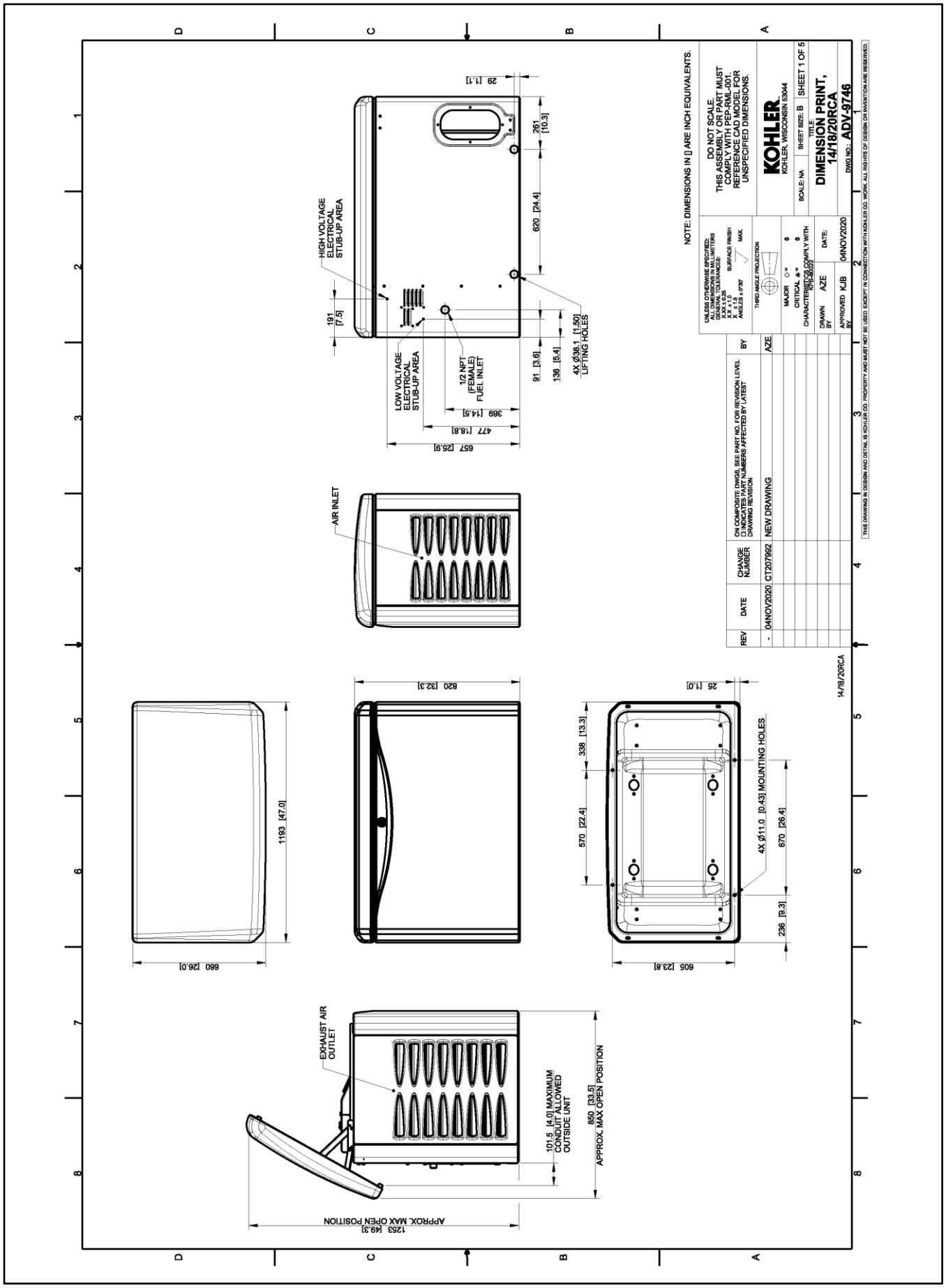

Figure 62 Dimension Drawing, 14/20RCA/L, ADV-9746 Sheet 1

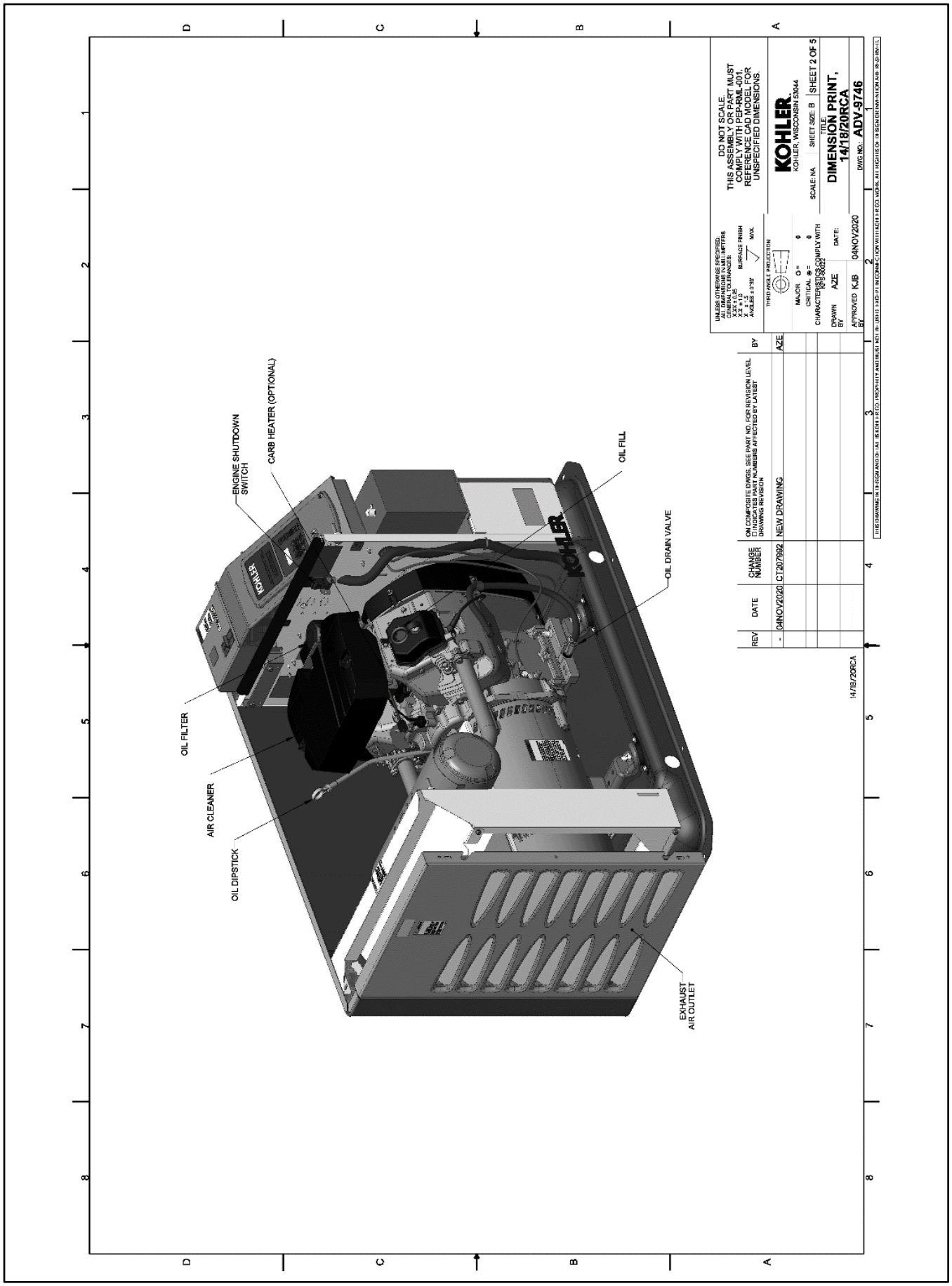

Figure 63 Dimension Drawing, 14/20RCA/L, ADV-9746 Sheet 2

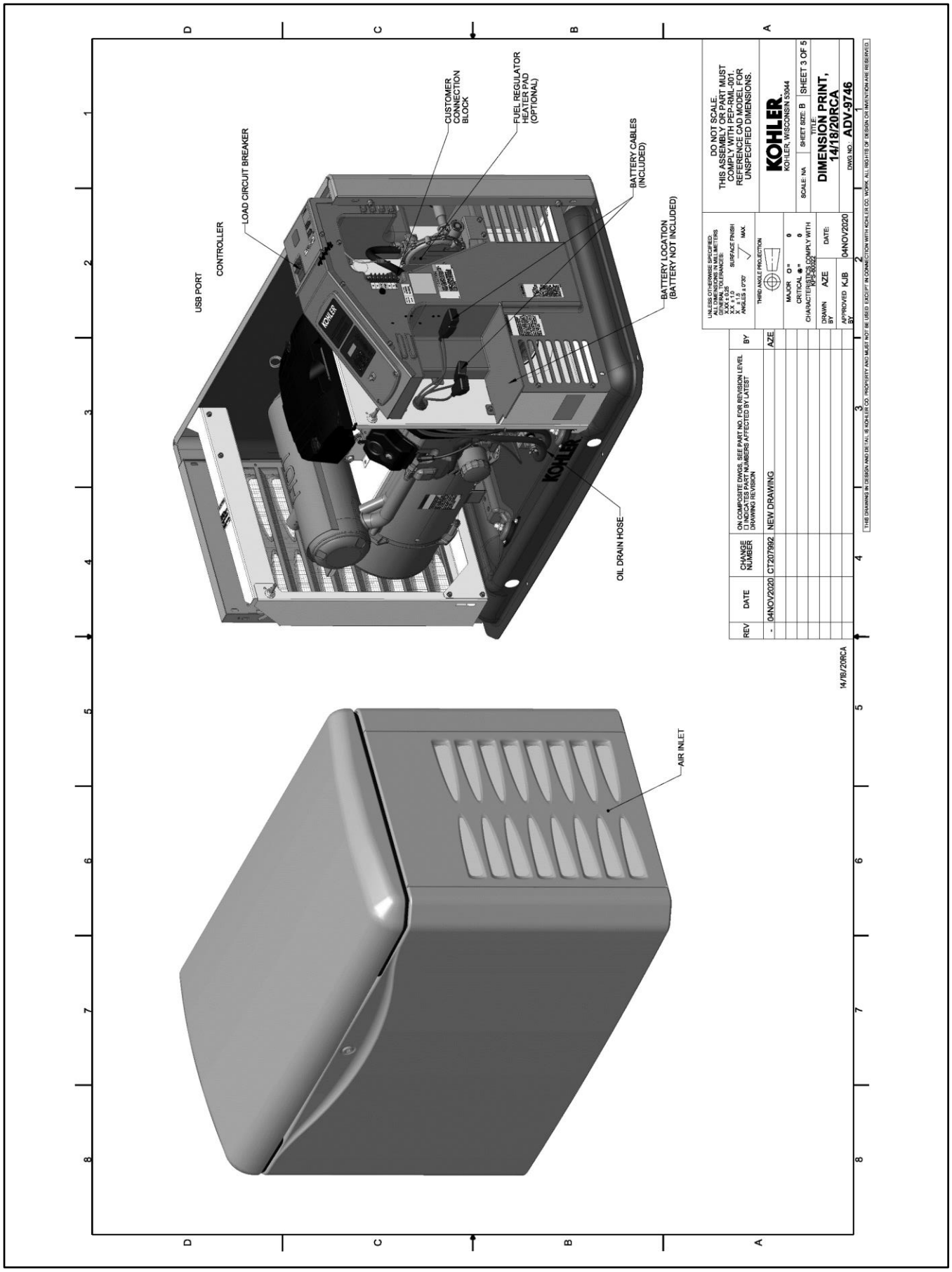

Figure 64 Dimension Drawing, 14/20RCA/L, ADV-9746 Sheet 3

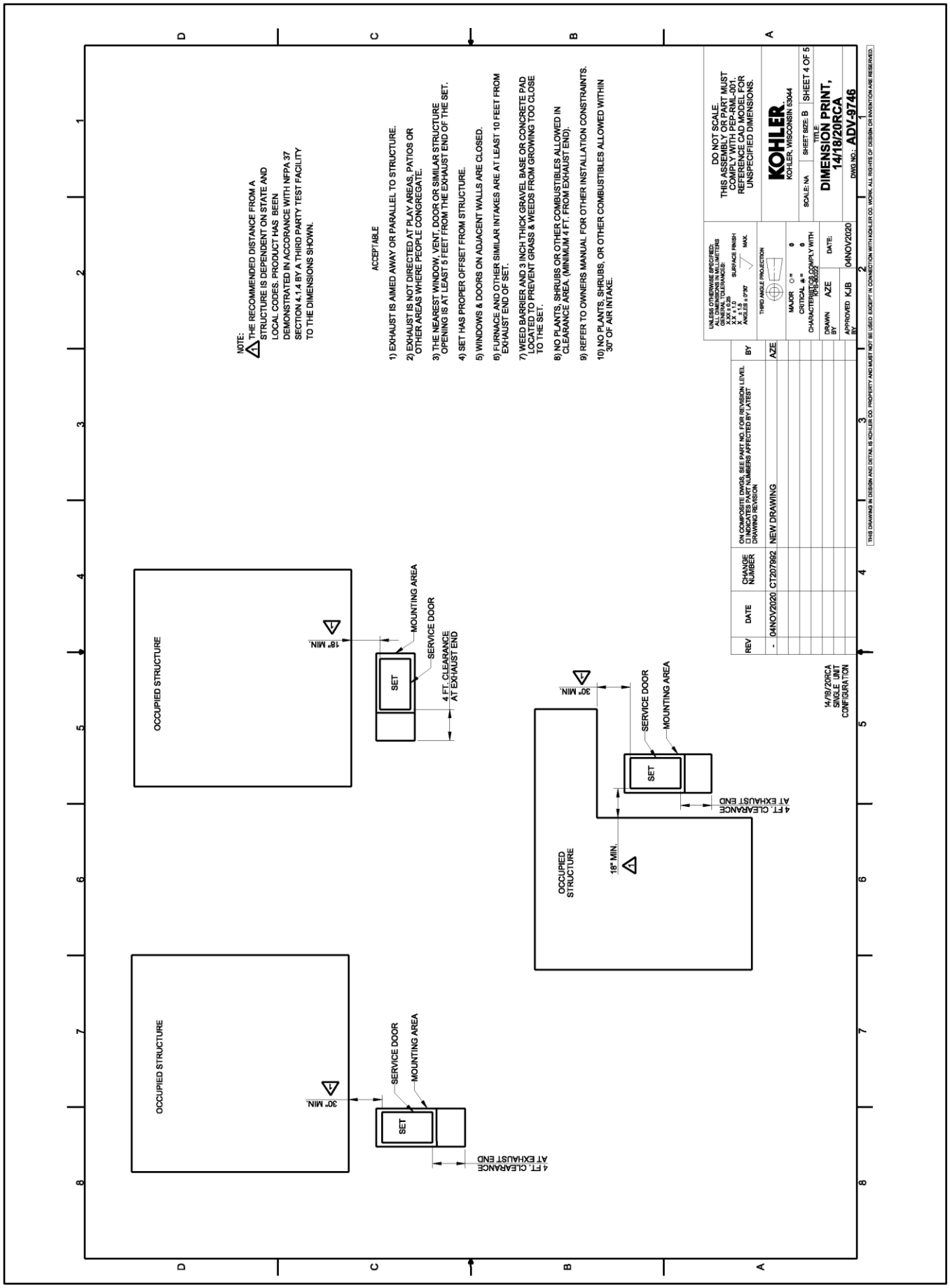

Figure 65 Dimension Drawing, 14/20RCA/L, ADV-9746 Sheet 4

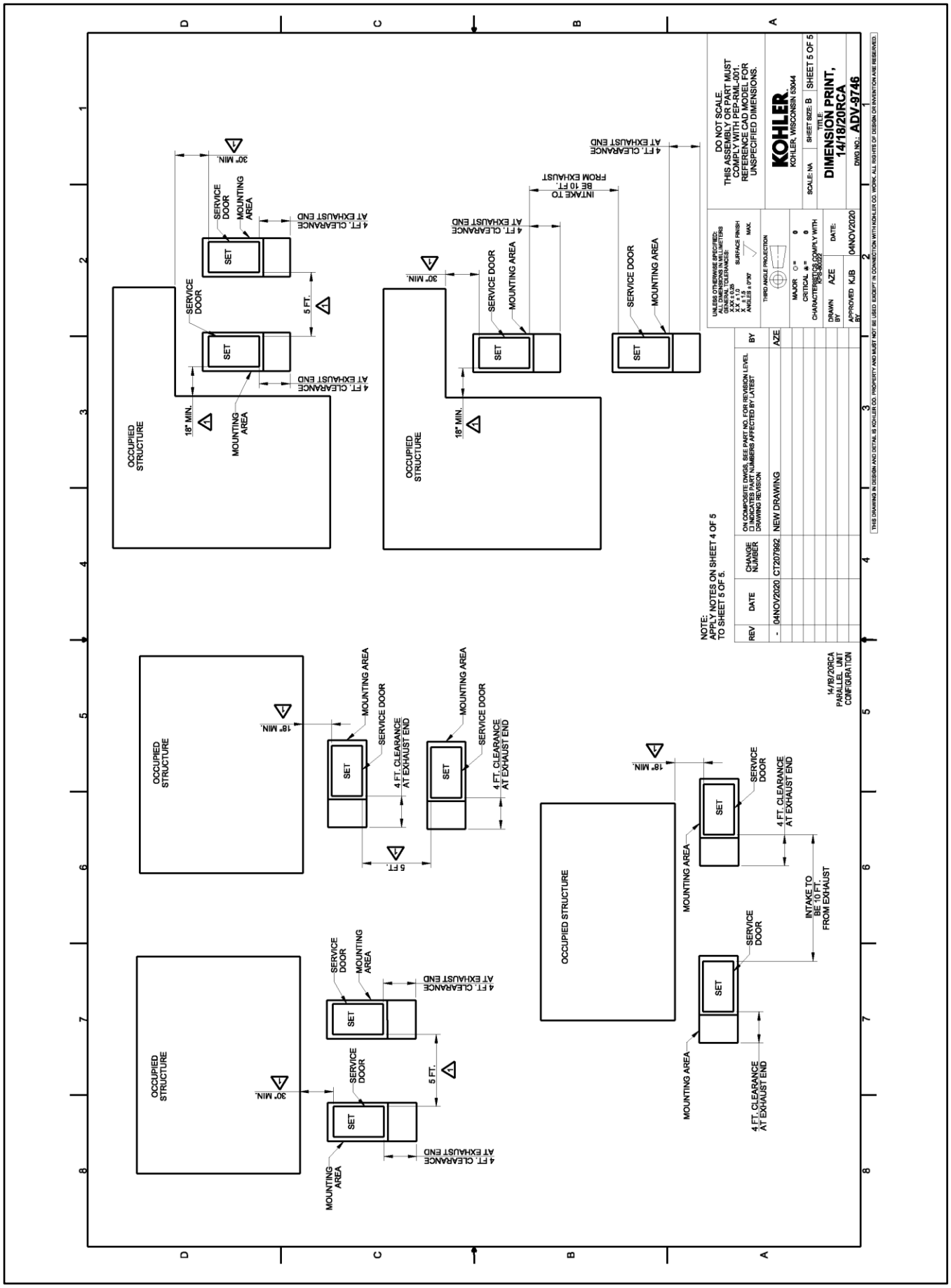

Figure 66 Dimension Drawing, 14/20RCA/L, ADV-9746, Sheet 5

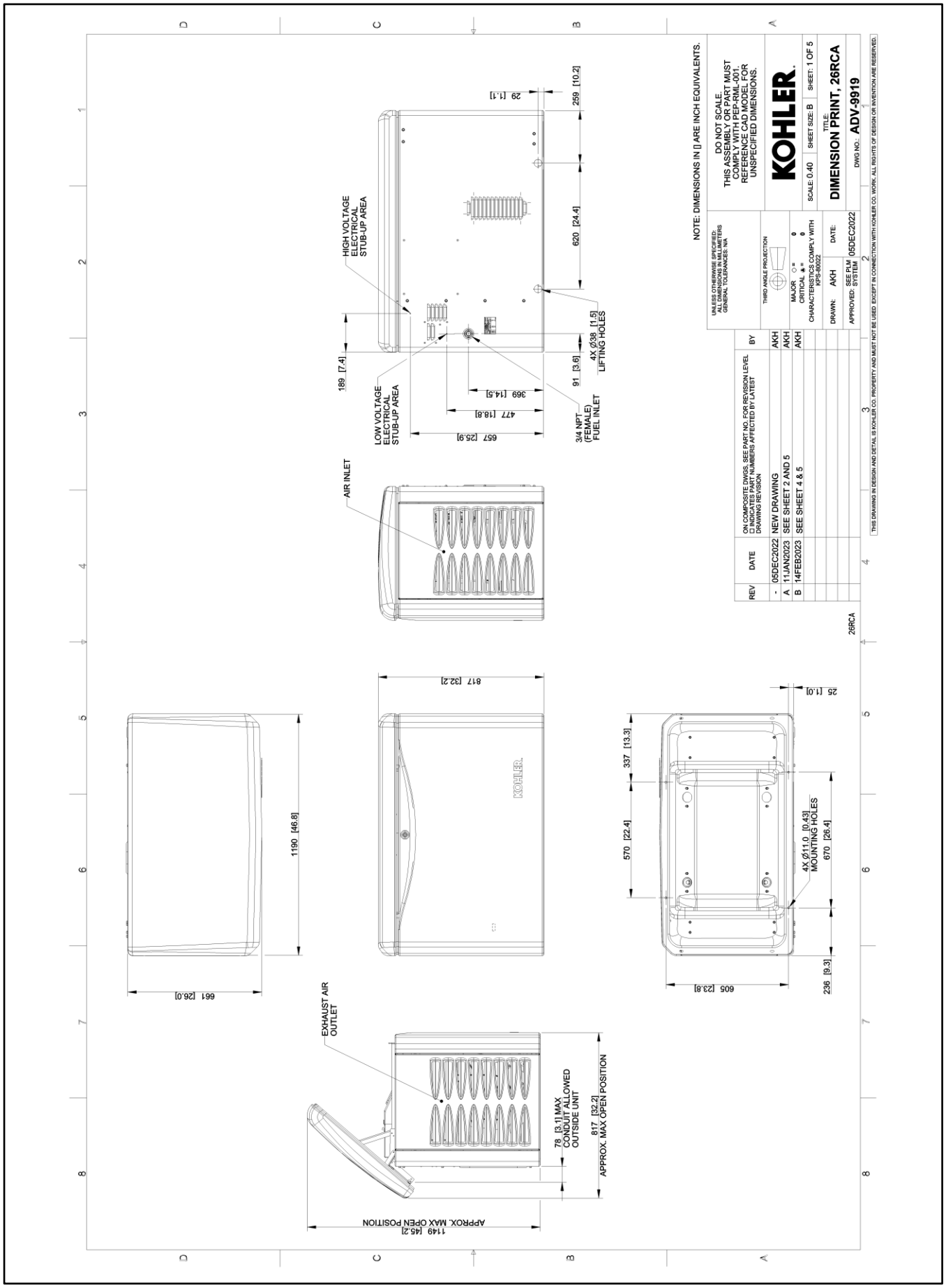

Figure 67 Dimension Drawing, 26RCA/L, ADV-9919 Sheet 1

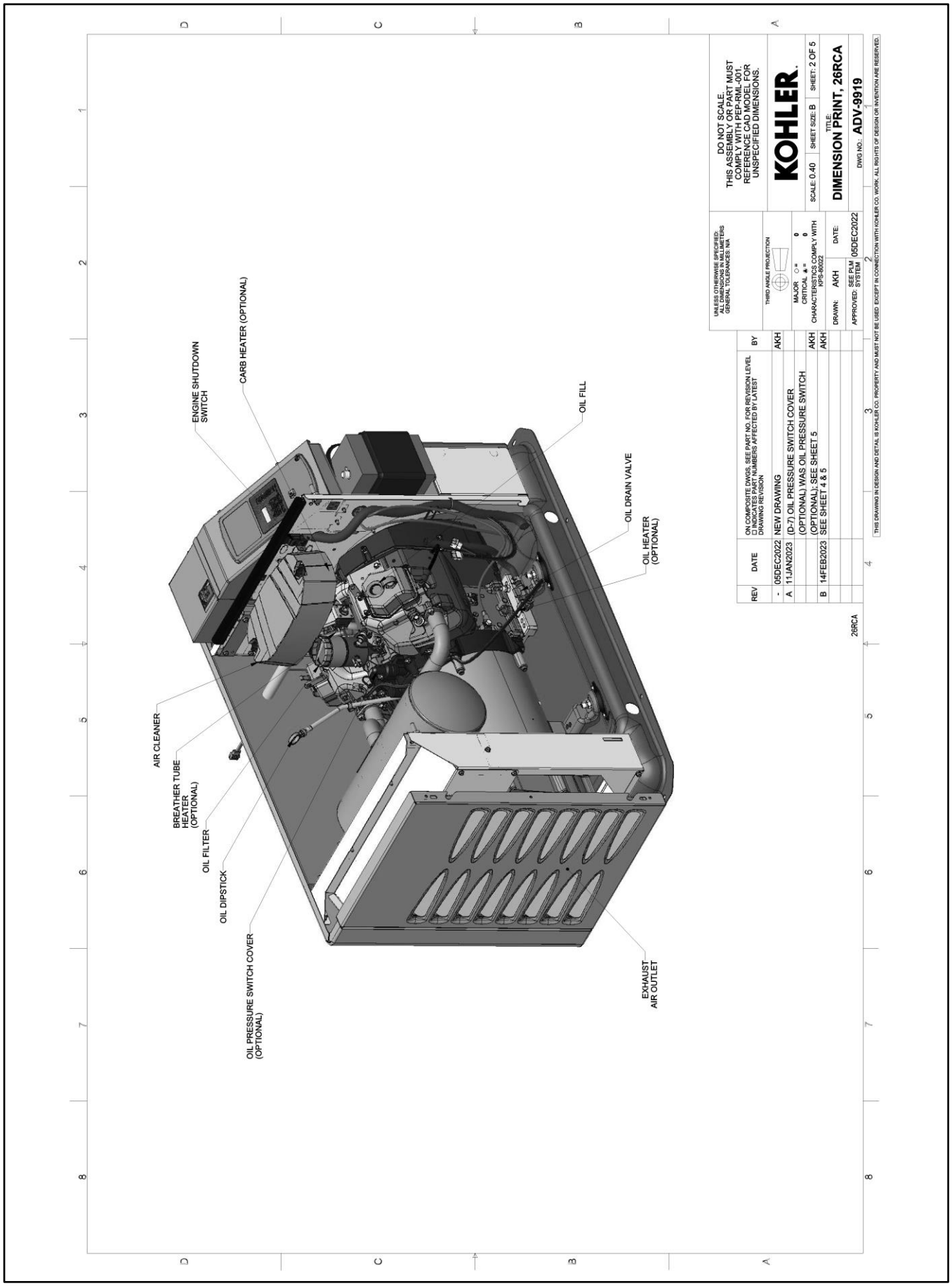

Figure 68 Dimension Drawing, 26RCA/L, ADV-9919 Sheet 2

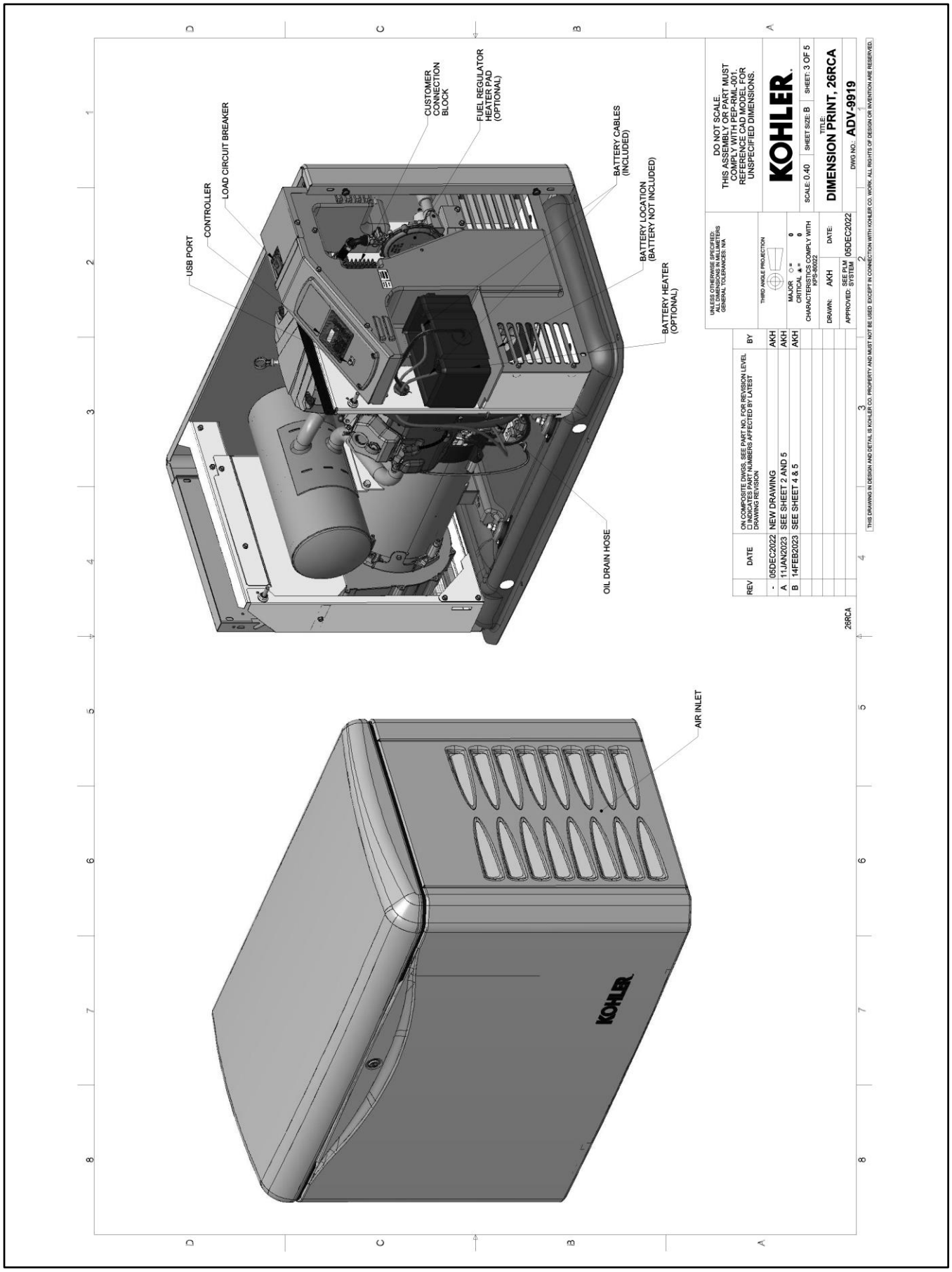

Figure 69 Dimension Drawing, 26RCA/L, ADV-9919 Sheet 3

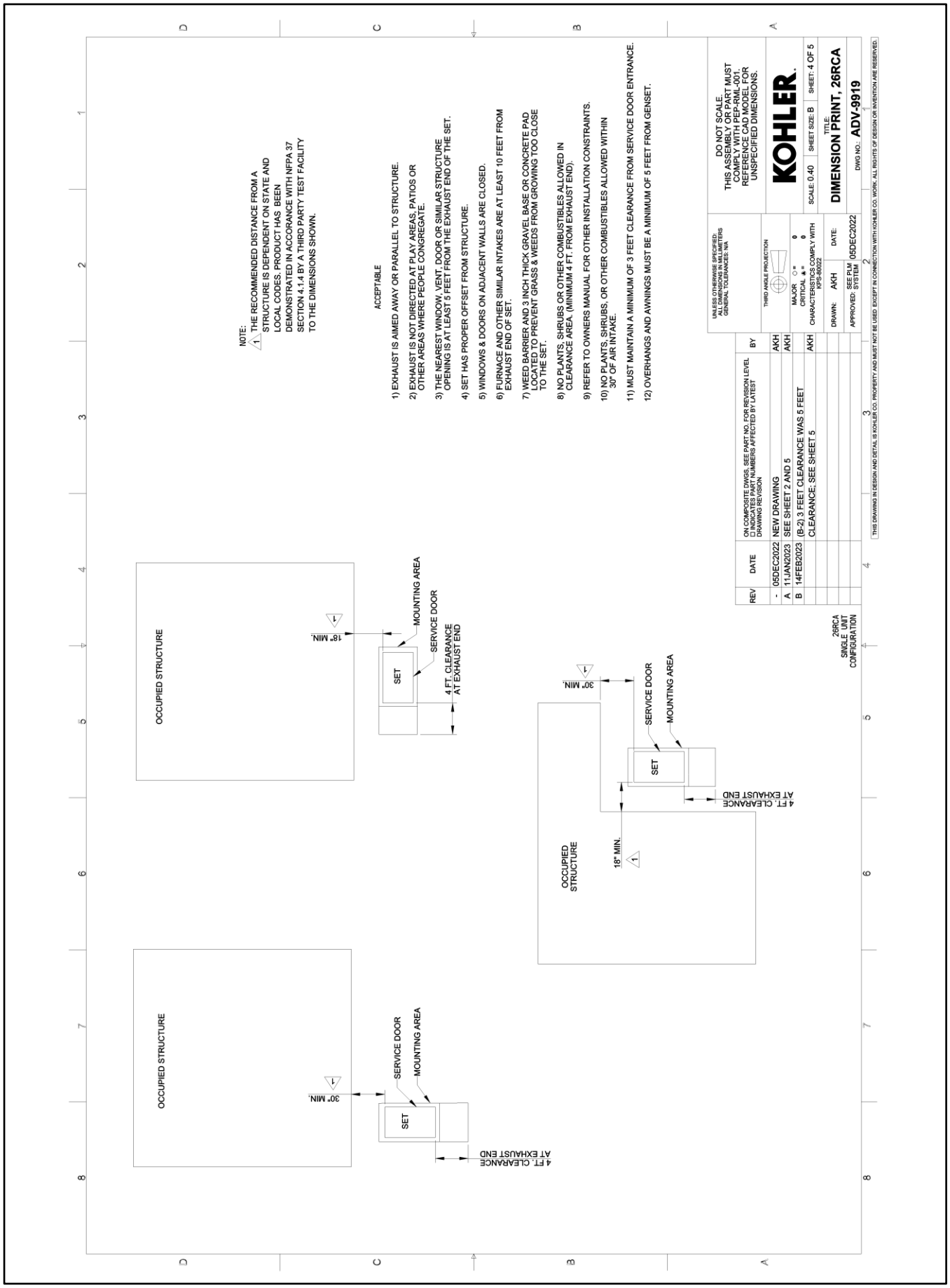

Figure 70 Dimension Drawing, 26RCA/L, ADV-9919 Sheet 4

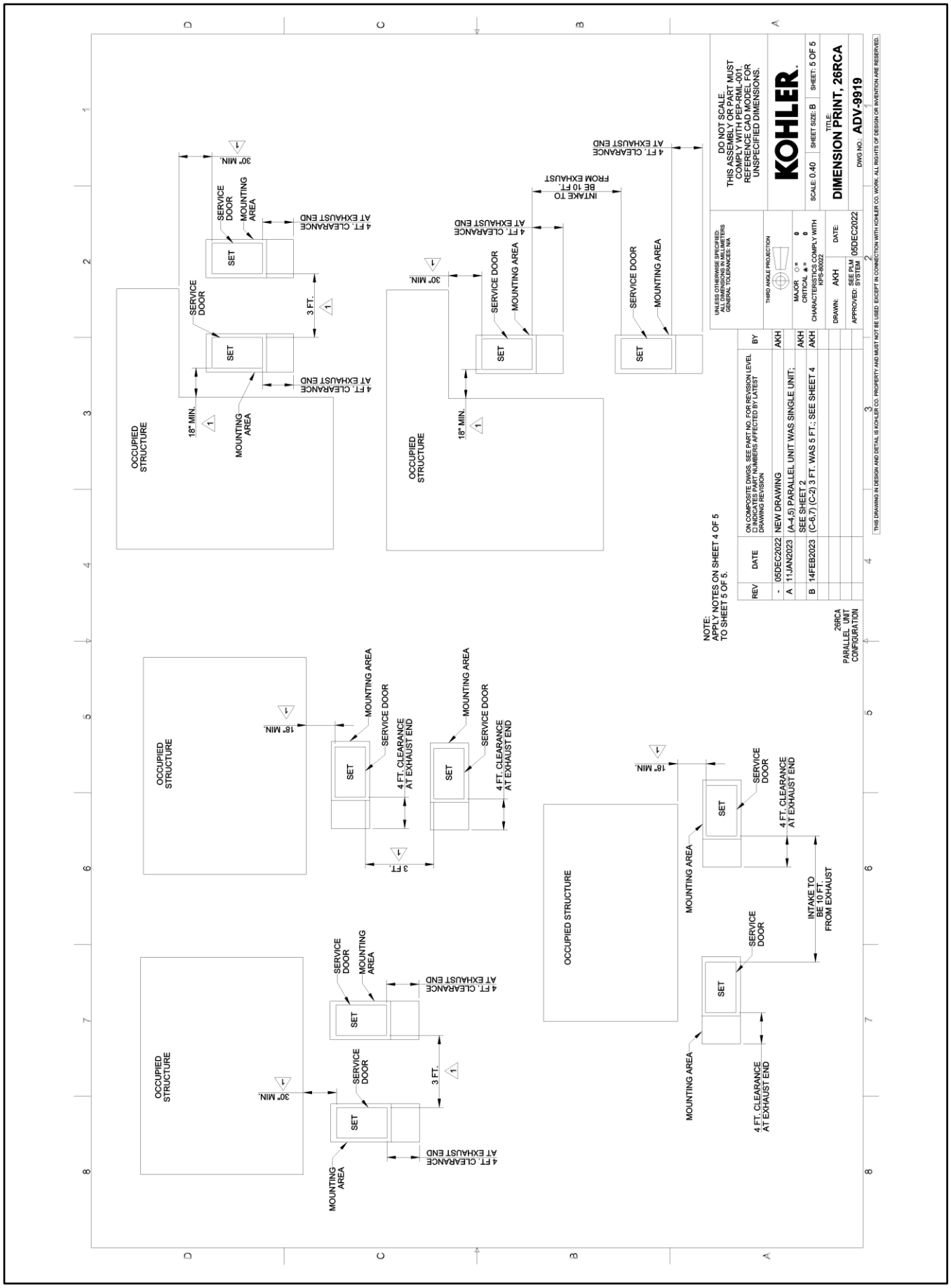

Figure 71 Dimension Drawing, 26RCA/L, ADV-9919 Sheet 5

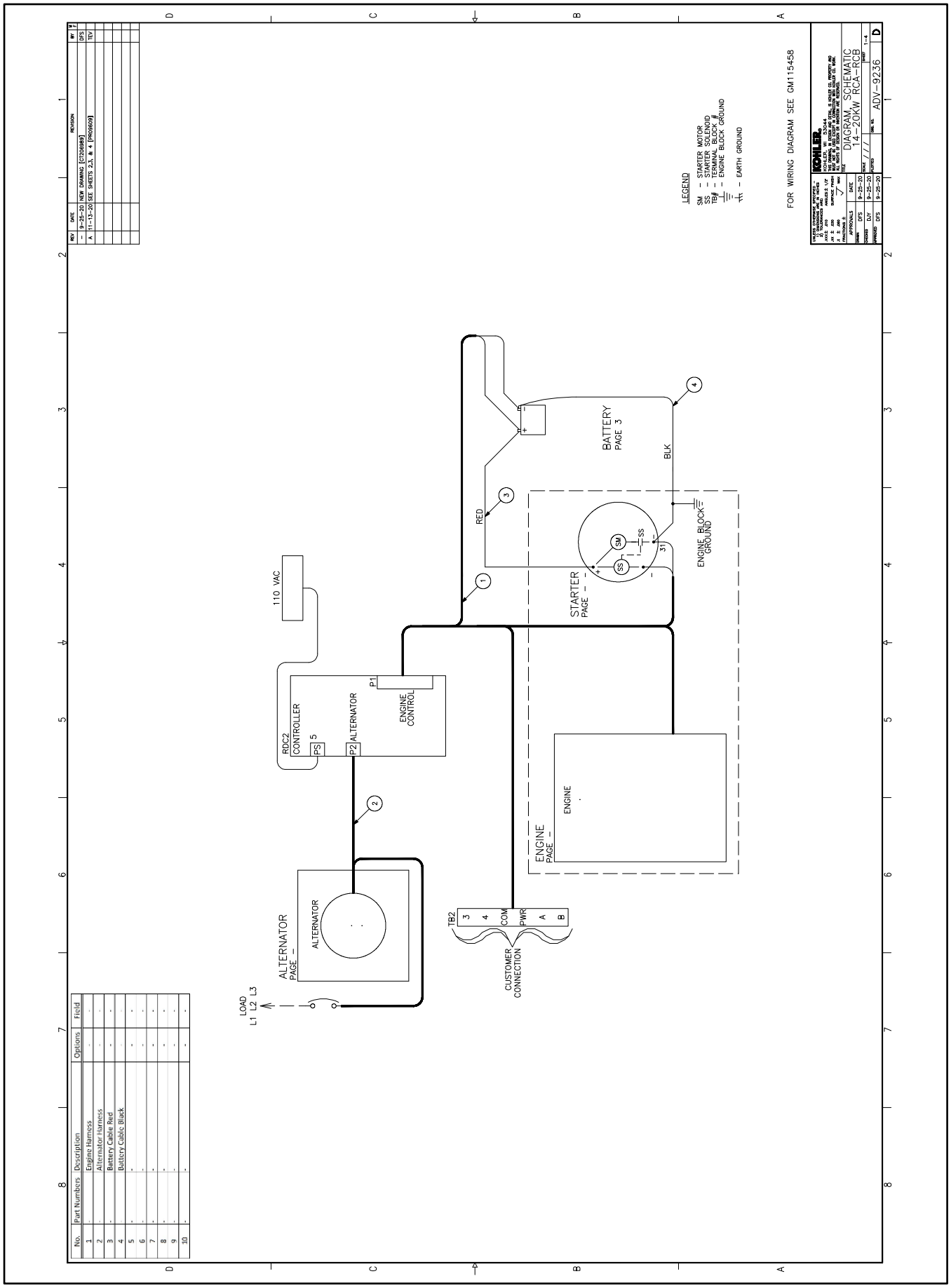

No.	Part Numbers	Description	Options	Field
1	-	Engine Harness	-	-
2	-	Alternator Harness	-	-
3	-	Battery Cable Red	-	-
4	-	Battery Cable Black	-	-
5	-	-	-	-
6	-	-	-	-
7	-	-	-	-
8	-	-	-	-
9	-	-	-	-
10	-	-	-	-

REV	DATE	REVISION	BY
–	9–25–20	NEW DRAWING [C120698]	DPS
A	11–13–20	SEE SHEETS 2,3, & 4 [P008609]	TDV

Figure 72 Schematic Diagram, 14/20RCA/L, ADV-9236 Sheet 1

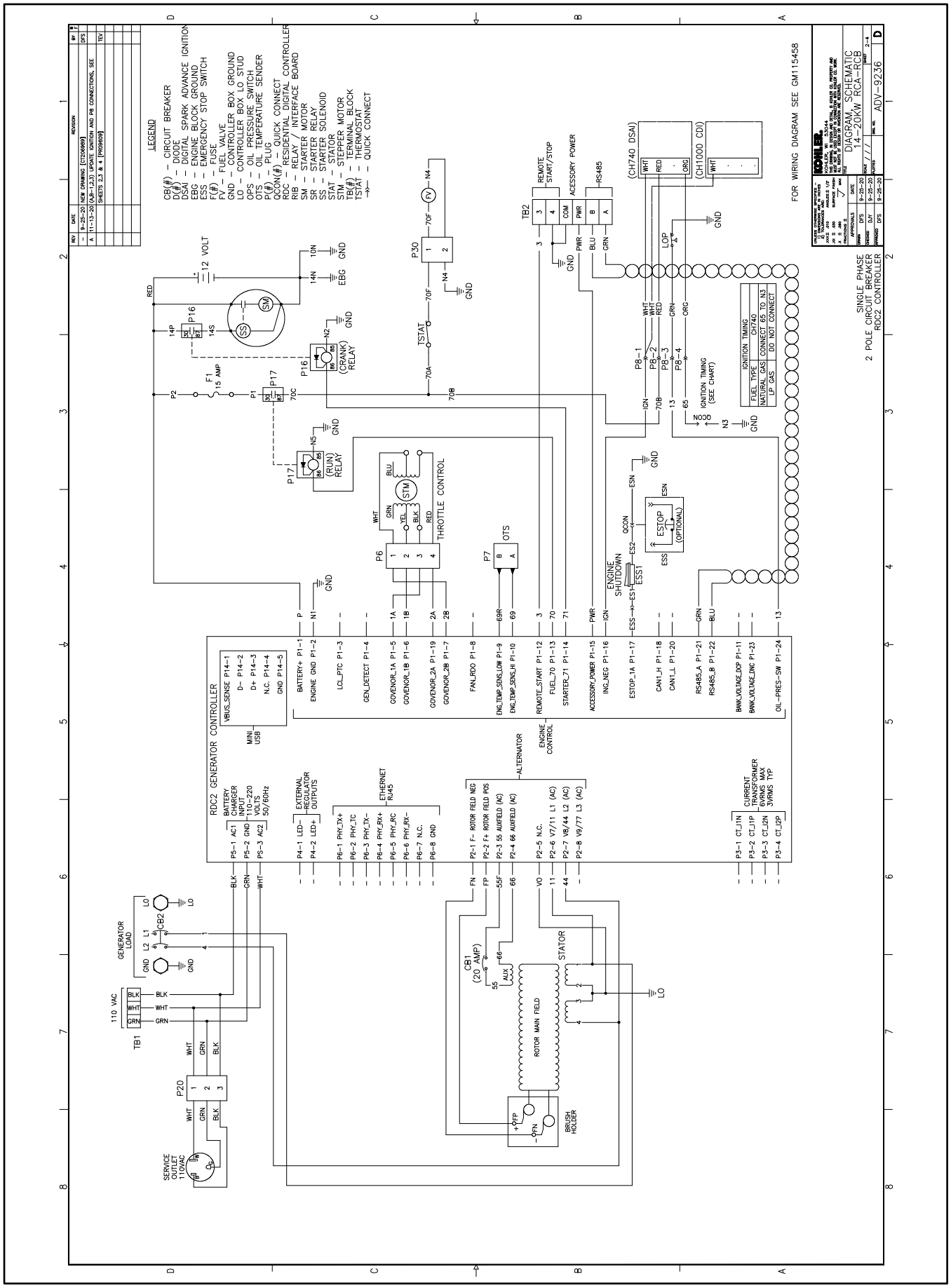

Figure 73 Schematic Diagram, 14/20RCA/L, ADV-9236 Sheet 2

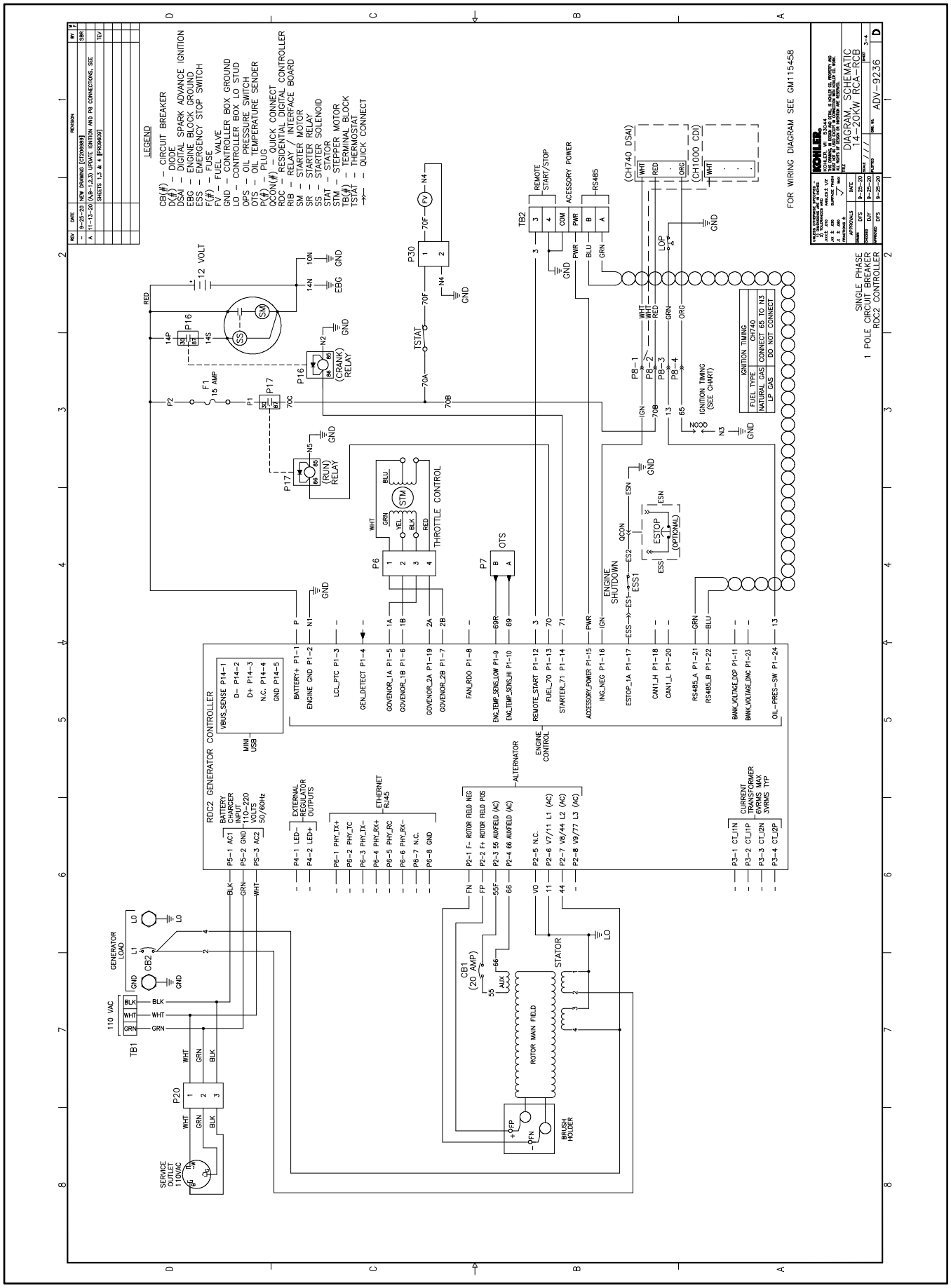

Figure 74 Schematic Diagram, 14/20RCA/L, ADV-9236 Sheet 3

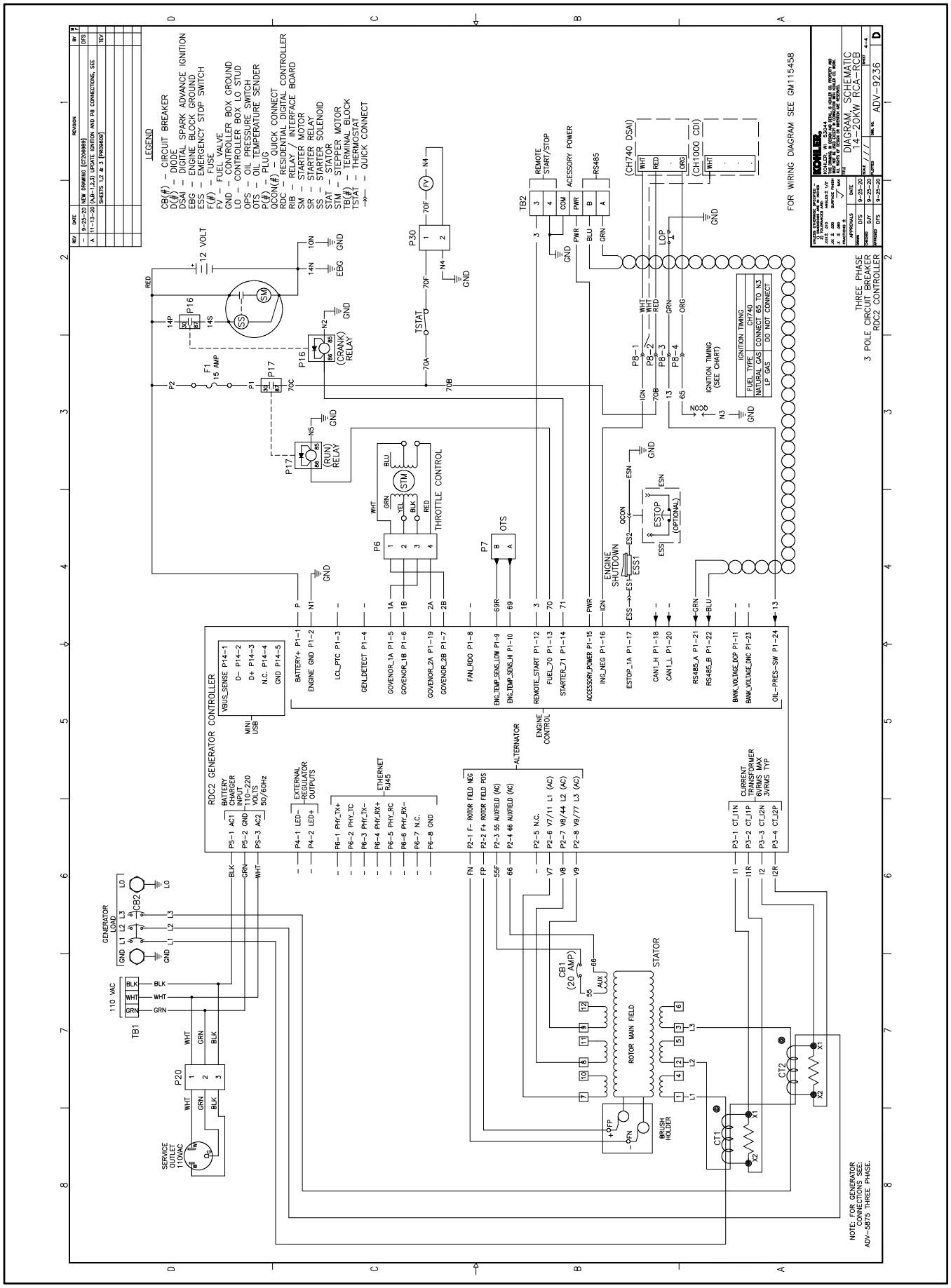

Figure 75 Schematic Diagram, 14/20RCA/L, ADV-9236 Sheet 4

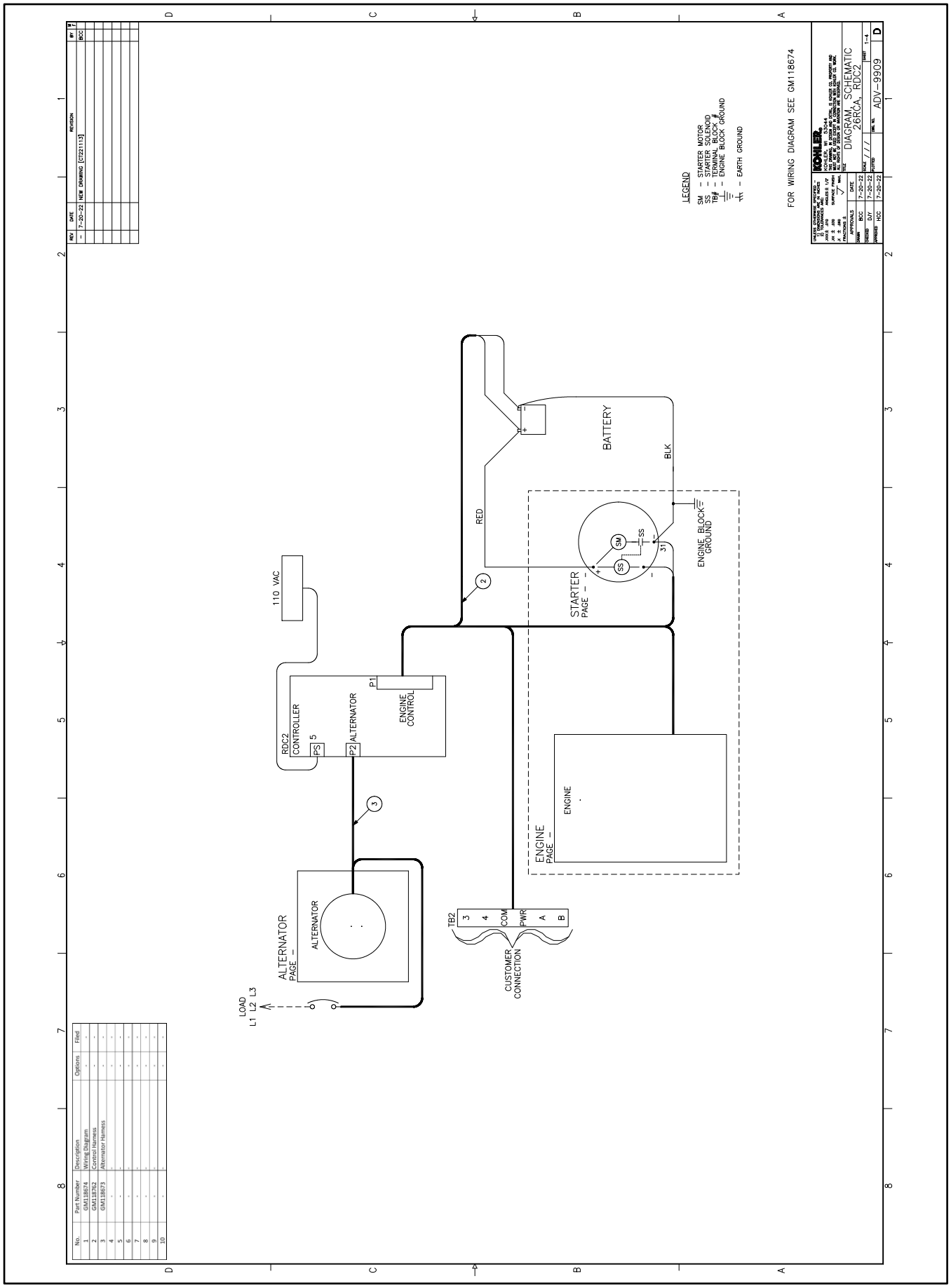

Figure 76 Schematic Diagram, 26RCA/L, ADV-9909 Sheet 1

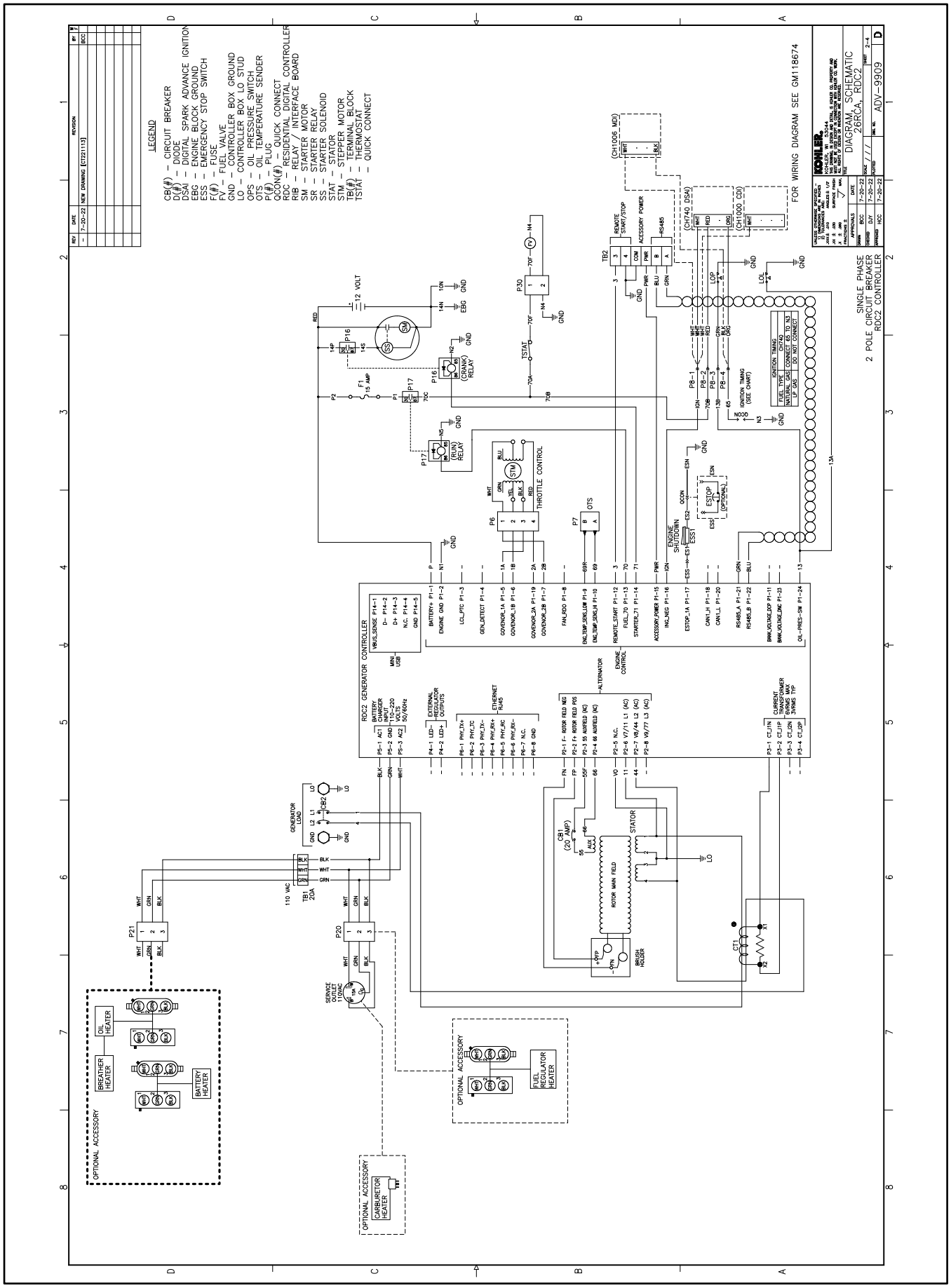

Figure 77 Schematic Diagram, 26RCA/L, ADV-9909 Sheet 2

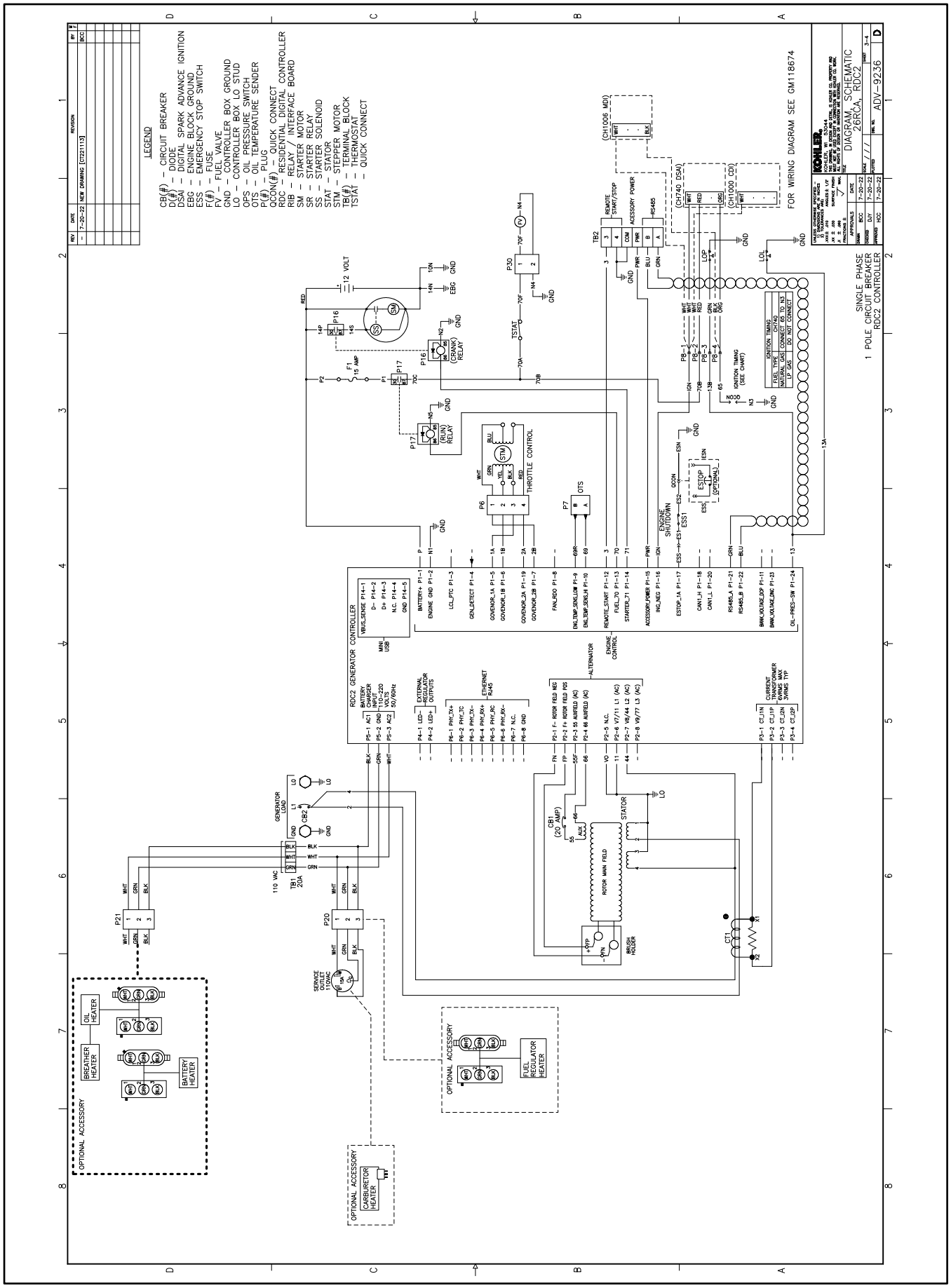

Figure 78 Schematic Diagram, 26RCA/L, ADV-9909 Sheet 3

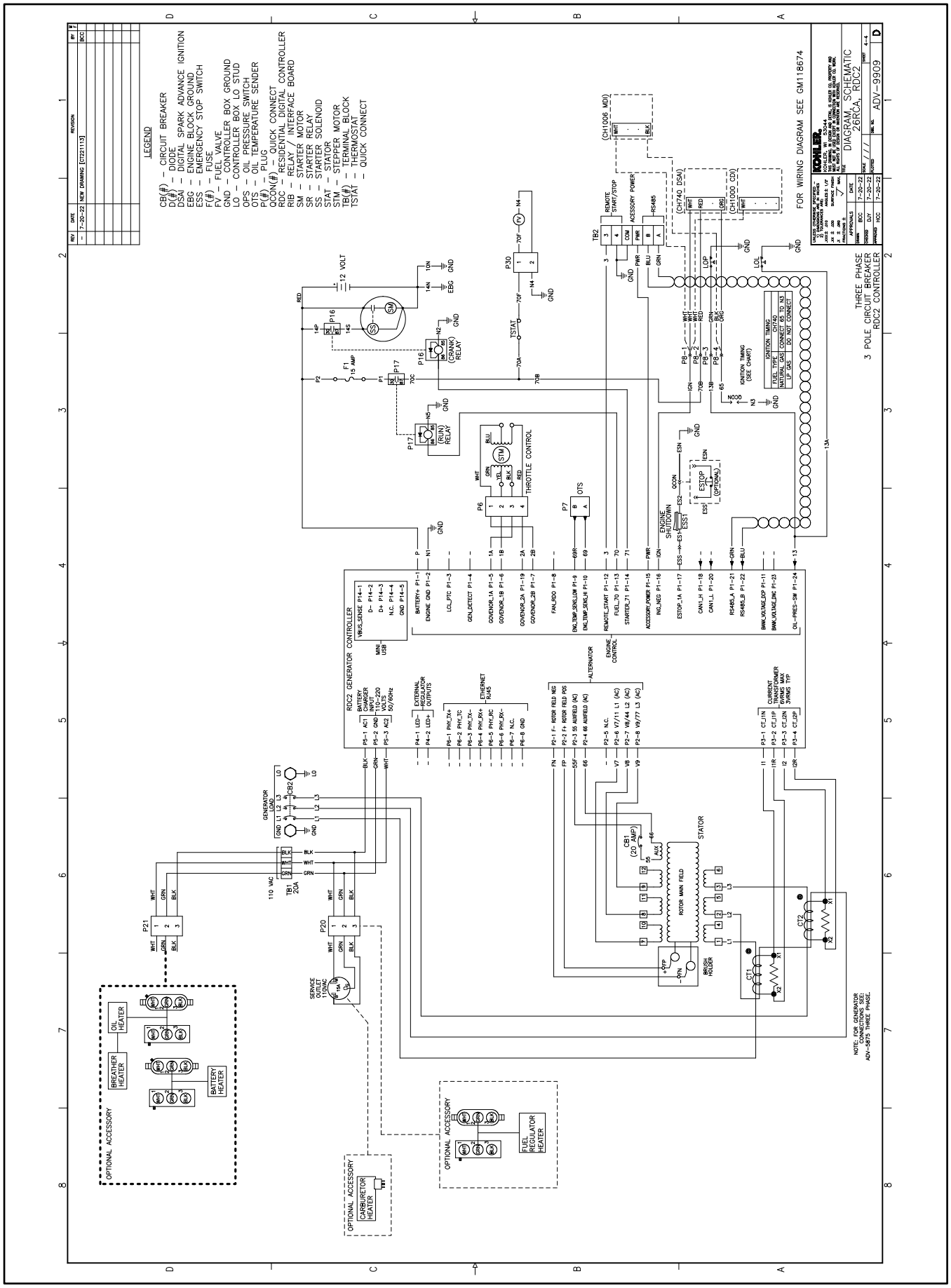

Figure 79 Schematic Diagram, 26RCA/L, ADV-9909 Sheet 4

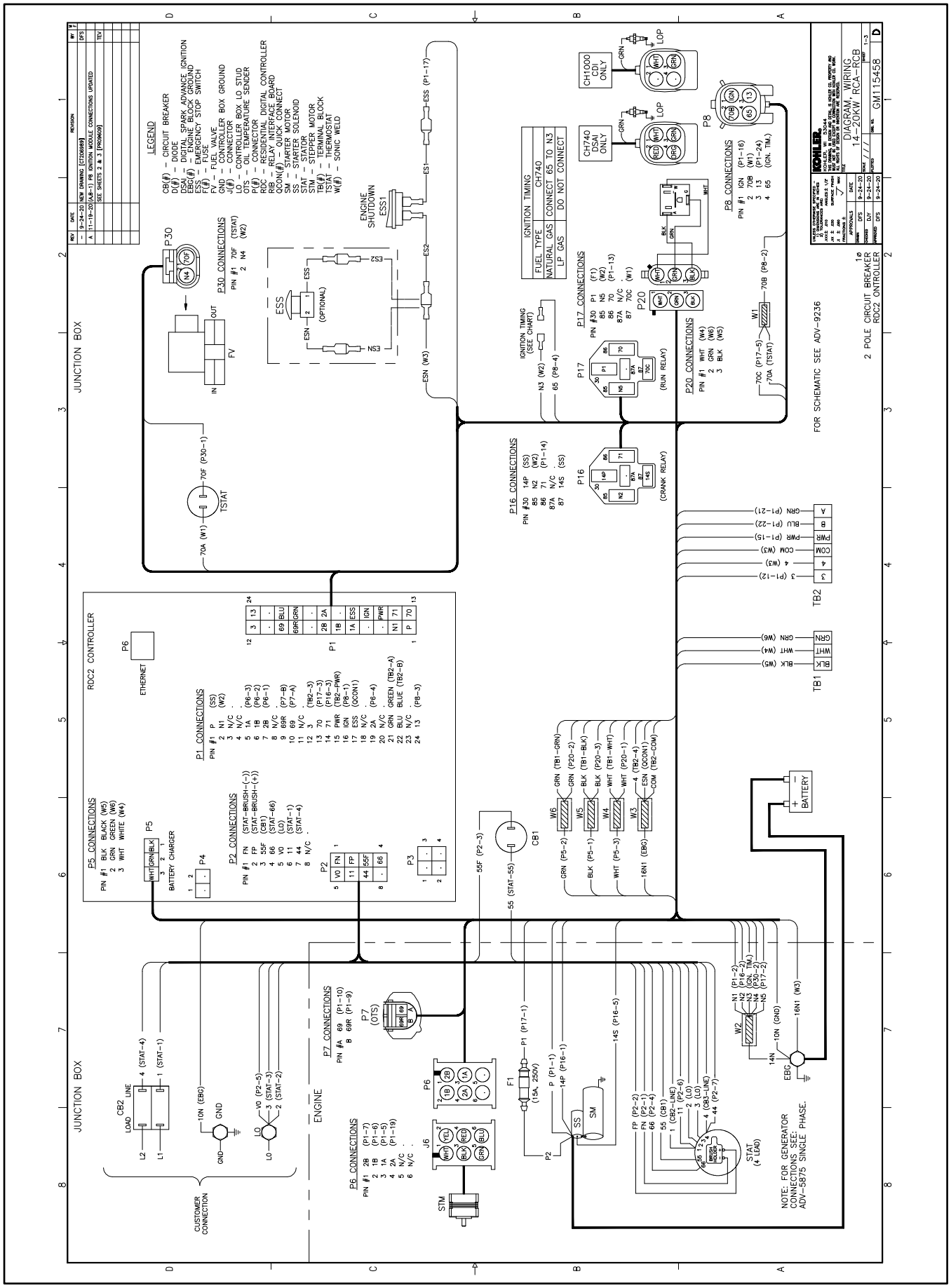

Figure 80 Wiring Diagram, 14/20RCA/L, GM115458 Sheet 1, Single Phase, 2-Pole Circuit Breaker

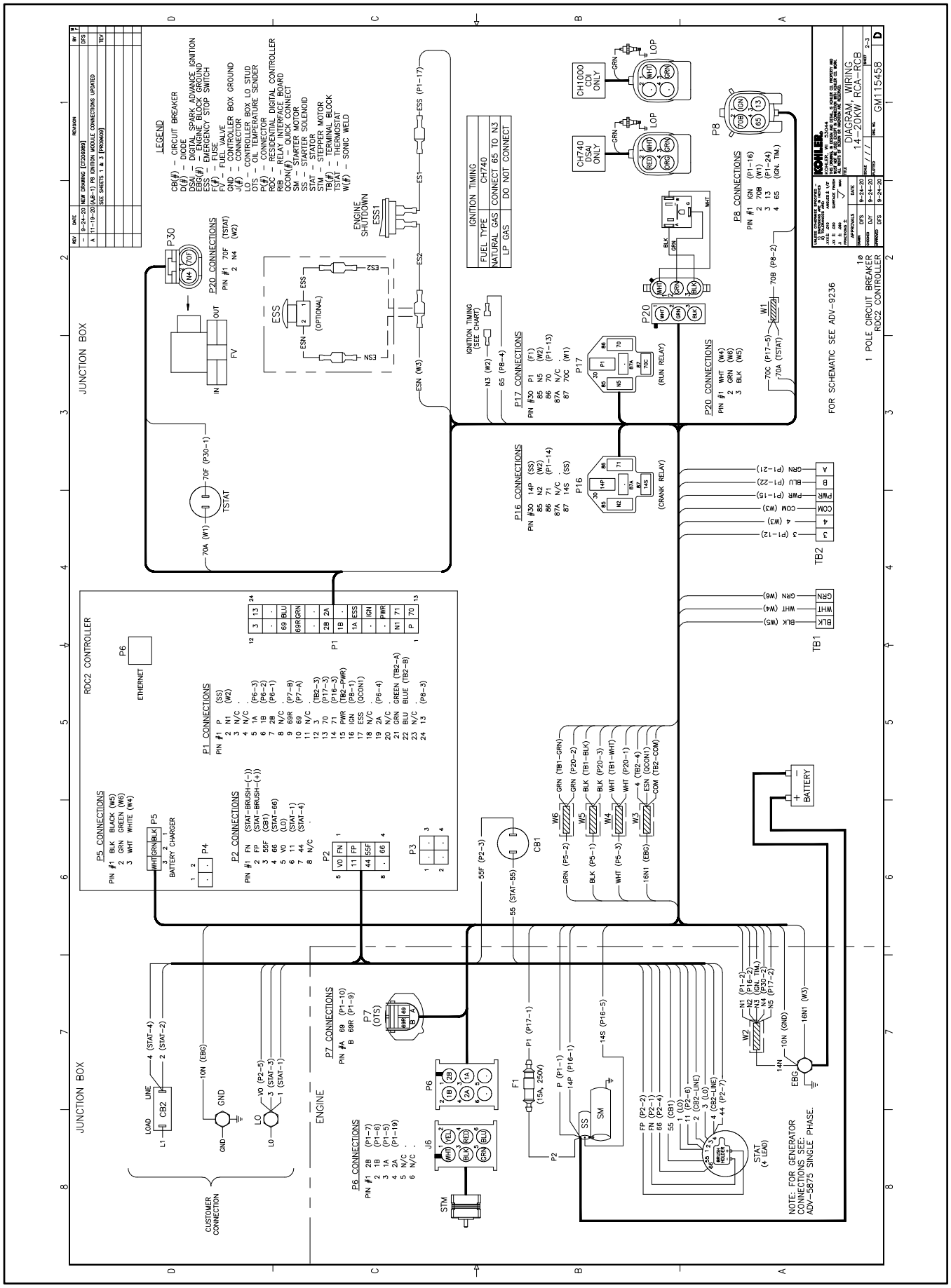

Figure 81 Wiring Diagram, 14/20RCA/L, GM115458 Sheet 2, Single Phase, 2-Pole Circuit Breaker

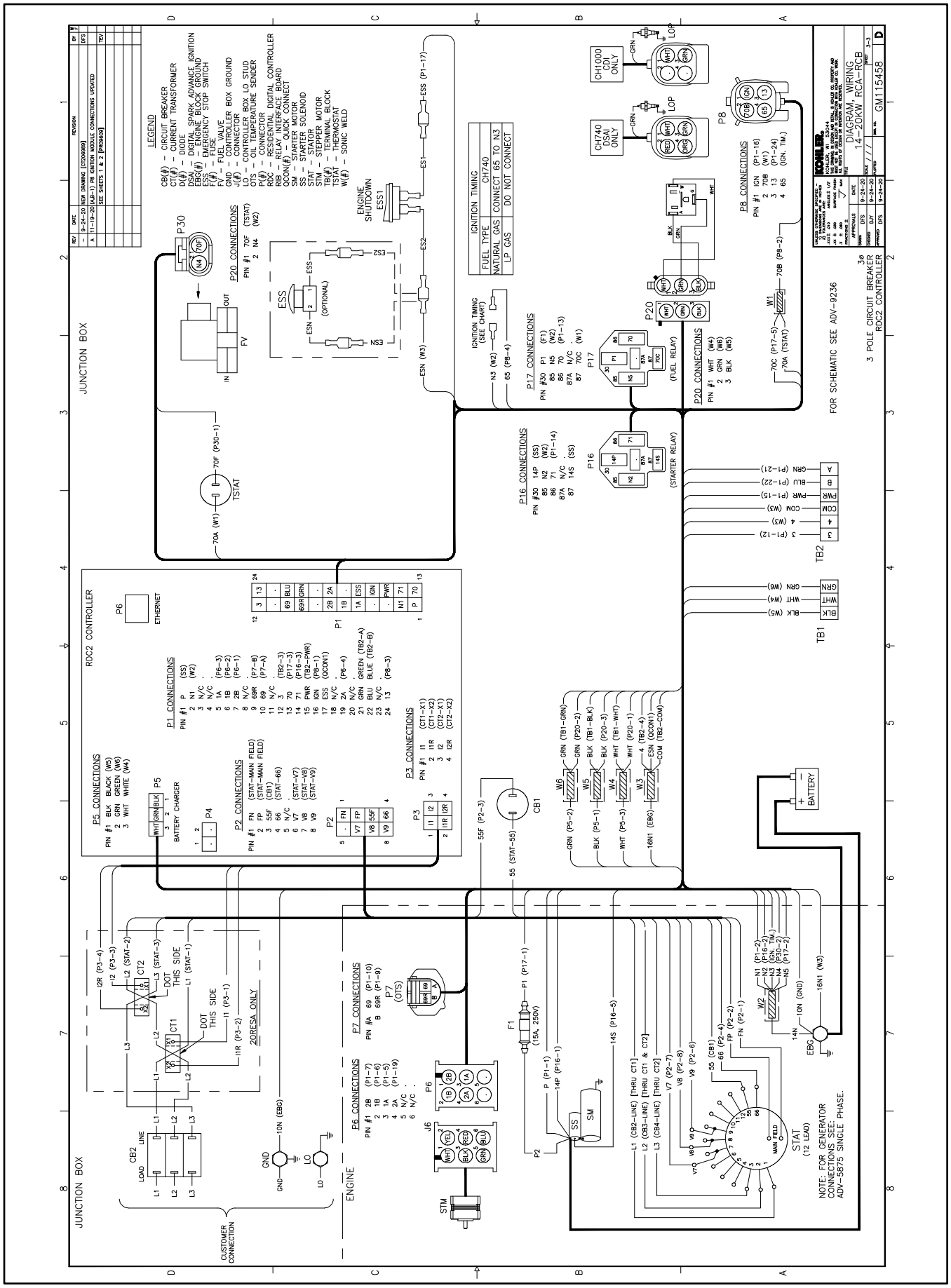

Figure 82 Wiring Diagram, 14/20RCA/L, GM115458 Sheet 3, Three Phase, 3-Pole Circuit Breaker

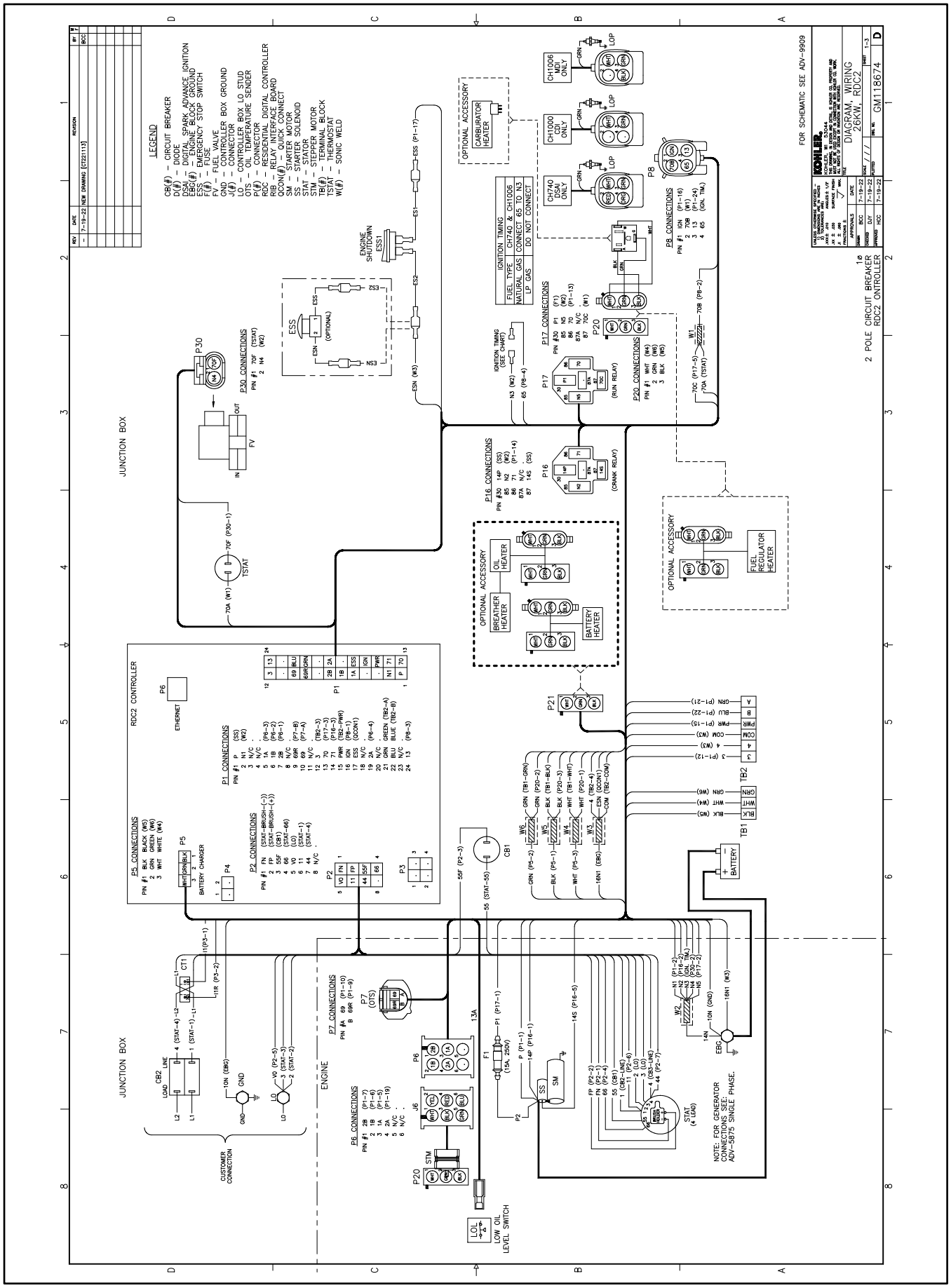

Figure 83 Wiring Diagram, 26RCA/L, GM118674 Sheet 1, Single Phase, 2-Pole Circuit Breaker

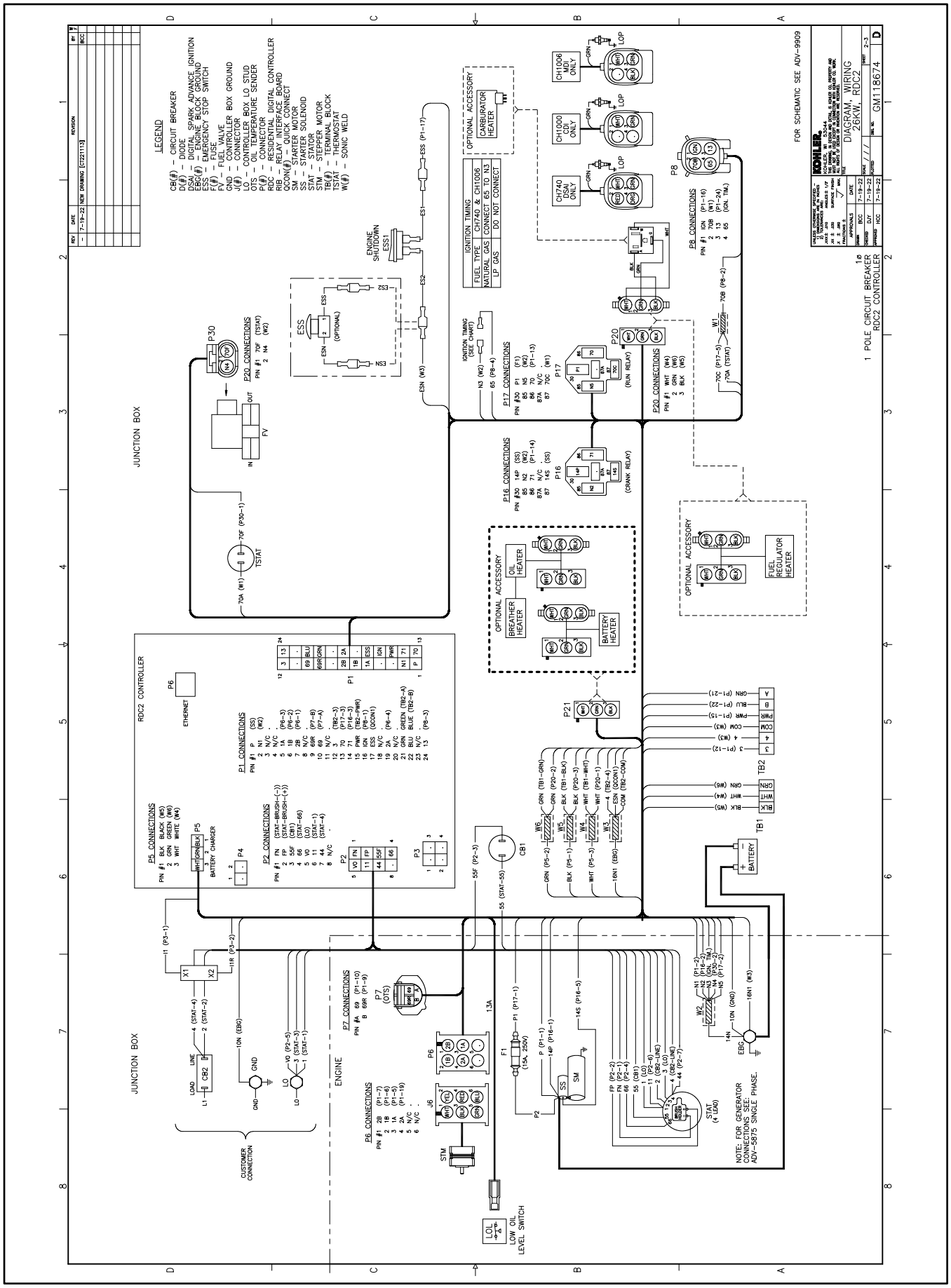

Figure 84 Wiring Diagram, 26RCA/L, GM118674 Sheet 2, Single Phase, 2-Pole Circuit Breaker

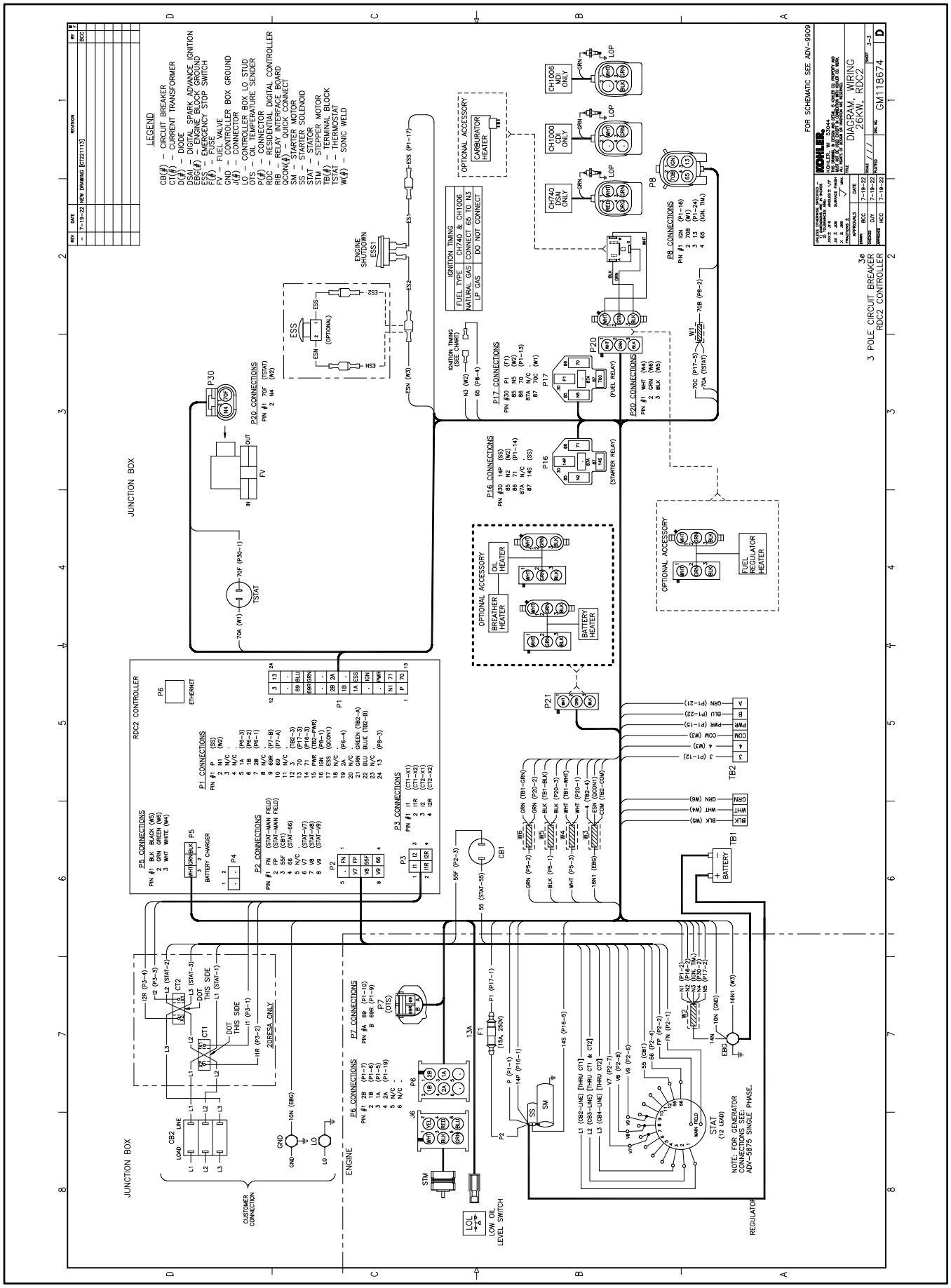

Figure 85 Wiring Diagram, 26RCA/L, GM118674 Sheet 3, Three Phase, 3-Pole Circuit Breaker

Notes

A, amp	ampere	blk. htr.	block heater	DAC	digital to analog converter
ABDC	after bottom dead center	BMEP	brake mean effective pressure	dB	decibel
AC	alternating current	bps	bits per second	dB(A)	decibel (A weighted)
A/D	analog to digital	br.	Brass	DC	direct current
ADC	advanced digital control; analog to digital converter	BTDC	before top dead center	DCR	direct current resistance
adj.	adjust, adjustment	Btu	British thermal unit	DEF	diesel exhaust fluid
ADV	advertising dimensional drawing	Btu/min.	British thermal units per minute	deg., °	degree
AGM	absorbent glass mat	C	Celsius, centigrade	dept.	department
Ah	amp-hour	cal.	Calorie	dia.	Diameter
AHWT	anticipatory high water temperature	CAN	controller area network	DI/EO	dual inlet/end outlet
AISI	American Iron and Steel Institute	CARB	California Air Resources Board	DIN	Deutsches Institut fur Normung e. V. (also Deutsche Industrie Normenausschuss)
ALOP	anticipatory low oil pressure	CAT5	Category 5 (network cable)	DIP	dual inline package
alt.	alternator	CB	circuit breaker	DPDT	double-pole, double-throw
Al	aluminum	CC	crank cycle	DPST	double-pole, single-throw
ANSI	American National Standards Institute (formerly American Standards Association, ASA)	cc	cubic centimeter	DS	disconnect switch
AO	anticipatory only	CCA	cold cranking amps	DVR	digital voltage regulator
APDC	Air Pollution Control District	ccw.	Counterclockwise	E2PROM, EEPROM	electrically-erasable programmable read-only memory
API	American Petroleum Institute	CEC	Canadian Electrical Code	E, emer.	emergency (power source)
approx.	approximate, approximately	cert.	certificate, certification, certified	EATS	Exhaust Aftertreatment System
APU	Auxiliary Power Unit	cfh	cubic feet per hour	ECM	electronic control module, engine control module
AQMD	Air Quality Management District	cfm	cubic feet per minute	EDI	electronic data interchange
AR	as required, as requested	CG	center of gravity	EFR	emergency frequency relay
AS	as supplied, as stated, as suggested	CID	cubic inch displacement	e.g.	for example (exempli gratia)
ASE	American Society of Engineers	CL	centerline	EG	electronic governor
ASME	American Society of Mechanical Engineers	cm	centimeter	EGSA	Electrical Generating Systems Association
assy.	Assembly	CMOS	complementary metal oxide substrate (semiconductor)	EIA	Electronic Industries Association
ASTM	American Society for Testing Materials	com	communications (port)	EI/EO	end inlet/end outlet
ATDC	after top dead center	coml	commercial	EMI	electromagnetic interference
ATS	automatic transfer switch	Coml/Rec	Commercial/Recreational	emiss.	Emission
auto.	Automatic	conn.	Connection	eng.	Engine
aux.	auxiliary	cont.	continued	EPA	Environmental Protection Agency
avg.	average	CPVC	chlorinated polyvinyl chloride	EPS	emergency power system
AVR	automatic voltage regulator	crit.	Critical	ER	emergency relay
AWG	American Wire Gauge	CRM	Common Rail Manifold	ES	engineering special, engineered special
AWM	appliance wiring material	CSA	Canadian Standards Association		
bat.	Battery	CT	current transformer	ESD	electrostatic discharge
BBDC	before bottom dead center	Cu	copper	est.	estimated
BC	battery charger, battery charging	cUL	Canadian Underwriter's Laboratories	E-Stop	emergency stop
BCA	battery charging alternator	cu. in.	cubic inch	etc.	et cetera (and so forth)
BCI	Battery Council International	cw.	Clockwise	exh.	exhaust
BDC	before dead center	CWC	city water-cooled	ext.	external
BHP	brake horsepower	cyl.	Cylinder	F	Fahrenheit, female
blk.	black (paint color), block (engine)	D/A	digital to analog	FDS	Fluid Dosing System

FHM	flat head machine (screw)	in.	inch	Lpm	liters per minute
fl. oz.	fluid ounce	in. H_2O	inches of water	LOP	low oil pressure
flex.	flexible	in. Hg	inches of mercury	LP	liquefied petroleum
freq.	frequency	in. Lb.	inch pounds	LPG	liquefied petroleum gas
FS	full scale	Inc.	incorporated	LS	left side
ft.	foot, feet	ind.	Industrial	L_{wa}	sound power level, A weighted
ft. lb.	foot pounds (torque)	int.	internal	LWL	low water level
ft./min.	feet per minute	int./ext.	internal/external	LWT	low water temperature
ftp	file transfer protocol	I/O	input/output	m	meter, milli (1/1000)
g	gram	IP	internet protocol	M	mega (10^6 when used with SI units), male
ga.	gauge (meters, wire size)	ISO	International Organization for Standardization	m^3	cubic meter
gal.	gallon	J	joule	m^3/hr.	cubic meters per hour
gen.	generator	JIS	Japanese Industry Standard	m^3/min.	cubic meters per minute
genset	generator set	k	kilo (1000)	mA	milliampere
GFI	ground fault interrupter	K	kelvin	man.	manual
GND, ⏚	ground	kA	kiloampere	max.	maximum
gov.	governor	KB	kilobyte (2^{10} bytes)	MB	megabyte (2^{20} bytes)
gph	gallons per hour	KBus	Kohler communication protocol	MCCB	molded-case circuit breaker
gpm	gallons per minute	kg	kilogram	MCM	one thousand circular mils
gr.	grade, gross	kg/cm^2	kilograms per square centimeter	meggar	megohmmeter
GRD	equipment ground	kgm	kilogram-meter	MHz	megahertz
gr. wt.	gross weight	kg/m^3	kilograms per cubic meter	mi.	mile
H x W x D	height by width by depth	kHz	kilohertz	mil	one one-thousandth of an inch
HC	hex cap	kJ	kilojoule	min.	minimum, minute
HCHT	high cylinder head temperature	km	kilometer	misc.	miscellaneous
HD	heavy duty	kOhm, kΩ	kilo-ohm	MJ	megajoule
HET	high exhaust temp., high engine temp.	kPa	kilopascal	mJ	millijoule
hex	hexagon	kph	kilometers per hour	mm	millimeter
Hg	mercury (element)	kV	kilovolt	mOhm, mΩ	milliohm
HH	hex head	kVA	kilovolt ampere	MOhm, MΩ	megohm
HHC	hex head cap	kVAR	kilovolt ampere reactive	MOV	metal oxide varistor
HP	horsepower	kW	kilowatt	MPa	megapascal
hr.	hour	kWh	kilowatt-hour	mpg	miles per gallon
HS	heat shrink	kWm	kilowatt mechanical	mph	miles per hour
hsg.	Housing	kWth	kilowatt-thermal	MS	military standard
HVAC	heating, ventilation, and air conditioning	L	liter	ms	millisecond
HWT	high water temperature	LAN	local area network	m/sec.	meters per second
Hz	hertz (cycles per second)	L x W x H	length by width by height	mtg.	mounting
IBC	International Building Code	lb.	pound, pounds	MTU	Motoren-und Turbinen-Union
IC	integrated circuit	lbm/ft^3	pounds mass per cubic feet	MW	megawatt
ID	inside diameter, identification	LCB	line circuit breaker	mW	milliwatt
IEC	International Electrotechnical Commission	LCD	liquid crystal display	µF	microfarad
IEEE	Institute of Electrical and Electronics Engineers	LED	light emitting diode	µF	microfarad
IMS	improved motor starting	Lph	liters per hour		

N, norm.	normal (power source)	PMG	permanent magnet generator	SCR	silicon controlled rectifier (electrical), selective catalytic reduction (exhaust emissions)
NA	not available, not applicable	pot	potentiometer, potential	s, sec.	second
nat. gas	natural gas	ppm	parts per million	SI	*Systeme international d'unites*, International System of Units
NBS	National Bureau of Standards	PROM	programmable read-only memory	SI/EO	side in/end out
NC	normally closed	psi	pounds per square inch	sil.	Silencer
NEC	National Electrical Code	psig	pounds per square inch gauge	SMTP	simple mail transfer protocol
NEMA	National Electrical Manufacturers Association	pt.	pint	SN	serial number
NiCd	nickel cadmium	PTC	positive temperature coefficient	SNMP	simple network management protocol
NFPA	National Fire Protection Association	PTO	power takeoff	SPDT	single-pole, double-throw
Nm	newton meter	PVC	polyvinyl chloride	SPST	single-pole, single-throw
NO	normally open	PVC	polyvinyl chloride	spec	specification
no., nos.	number, numbers	PWM	pulse width modulated, pulse width modulation	specs	specification(s)
NPS	National Pipe, Straight	qt.	quart, quarts	sq.	square
NPSC	National Pipe, Straight-coupling	qty.	quantity	sq. cm	square centimeter
NPT	National Standard taper pipe thread per general use	R	replacement (emergency) power source	sq. in.	square inch
NPTF	National Pipe, Taper-Fine	rad.	radiator, radius	SMS	short message service
NR	not required, normal relay	RAM	random access memory	SS	stainless steel
Ns	nanosecond	RDO	relay driver output	std.	standard
OC	overcrank	ref.	reference	stl.	Steel
OD	outside diameter	rem.	Remote	tach.	Tachometer
OEM	original equipment manufacturer	Res/Coml	Residential/Commercial	TB	terminal block
OF	overfrequency	RFI	radio frequency interference	TCP	transmission control protocol
opt.	option, optional	RH	round head	TD	time delay
OS	oversize, overspeed	RHM	round head machine (screw)	TDC	top dead center
OSHA	Occupational Safety and Health Administration	rly.	Relay	TDEC	time delay engine cooldown
OSHPD	Office of Statewide Health Planning and Development (California)	rms	root mean square	TDEN	time delay emergency to normal
OV	overvoltage	rnd.	Round	TDES	time delay engine start
oz.	ounce	RO	read only	TDNE	time delay normal to emergency
p., pp.	page, pages	ROM	read only memory	TDOE	time delay off to emergency
PC	personal computer	rot.	rotate, rotating	TDON	time delay off to normal
PCB	printed circuit board	rpm	revolutions per minute	temp.	temperature
pF	picofarad	RS	right side	term.	Terminal
PF	power factor	RTDs	resistance temperature detectors	THD	total harmonic distortion
ph., ø	phase	RTU	remote terminal unit	TIF	telephone influence factor
PHC	Phillips® head Crimptiter (screw)	RTV	room temperature vulcanization	tol.	Tolerance
PHH	Phillips® hex head (screw)	RW	read/write	turbo.	Turbocharger
PHM	pan head machine (screw)	SAE	Society of Automotive Engineers	typ.	typical (same in multiple locations)
PLC	programmable logic control	scfm	standard cubic feet per minute	UF	underfrequency

UHF	ultrahigh frequency
UIF	user interface
UL	Underwriter's Laboratories, Inc.
UNC	unified coarse thread (was NC)
UNF	unified fine thread (was NF)
univ.	universal
URL	uniform resource locator (web address)
US	undersize, underspeed
UV	ultraviolet, undervoltage
V	volt
VAC	volts alternating current
VAR	voltampere reactive
VDC	volts direct current
VFD	vacuum fluorescent display
VGA	video graphics adapter
VHF	very high frequency
W	watt
WCR	withstand and closing rating
w/	with
WO	write only
w/o	without
wt.	weight
xfmr	transformer

TP-7091 4/23d

Original Instructions (English)

© 2018 Kohler Co. All rights reserved.

KOHLER CO. Kohler, Wisconsin 53044
Phone 920-457-4441, Fax 920-459-1646
For the nearest sales/service outlet in the
US and Canada, phone 1-800-544-2444
KOHLERPower.com