CHAMPION
GLOBAL POWER EQUIPMENT™-MC

Champion Power Equipment, Inc., Santa Fe Springs, CA USA

**MODEL #201004**

# PARTS INFORMATION

## 7500W WIRELESS REMOTE START GENERATOR

## SERIAL NUMBER RANGE: ALL

To order replacement parts please visit:
**shop.championpowerequipment.com**
or call **1-877-338-0999.**

REV 20200910

# TABLE OF CONTENTS

Generator Parts Diagram ..... 3
Generator Parts List ..... 4
Engine Parts Diagram ..... 6
Engine Parts List ..... 7
Wiring Diagram ..... 9

# GENERATOR PARTS DIAGRAM

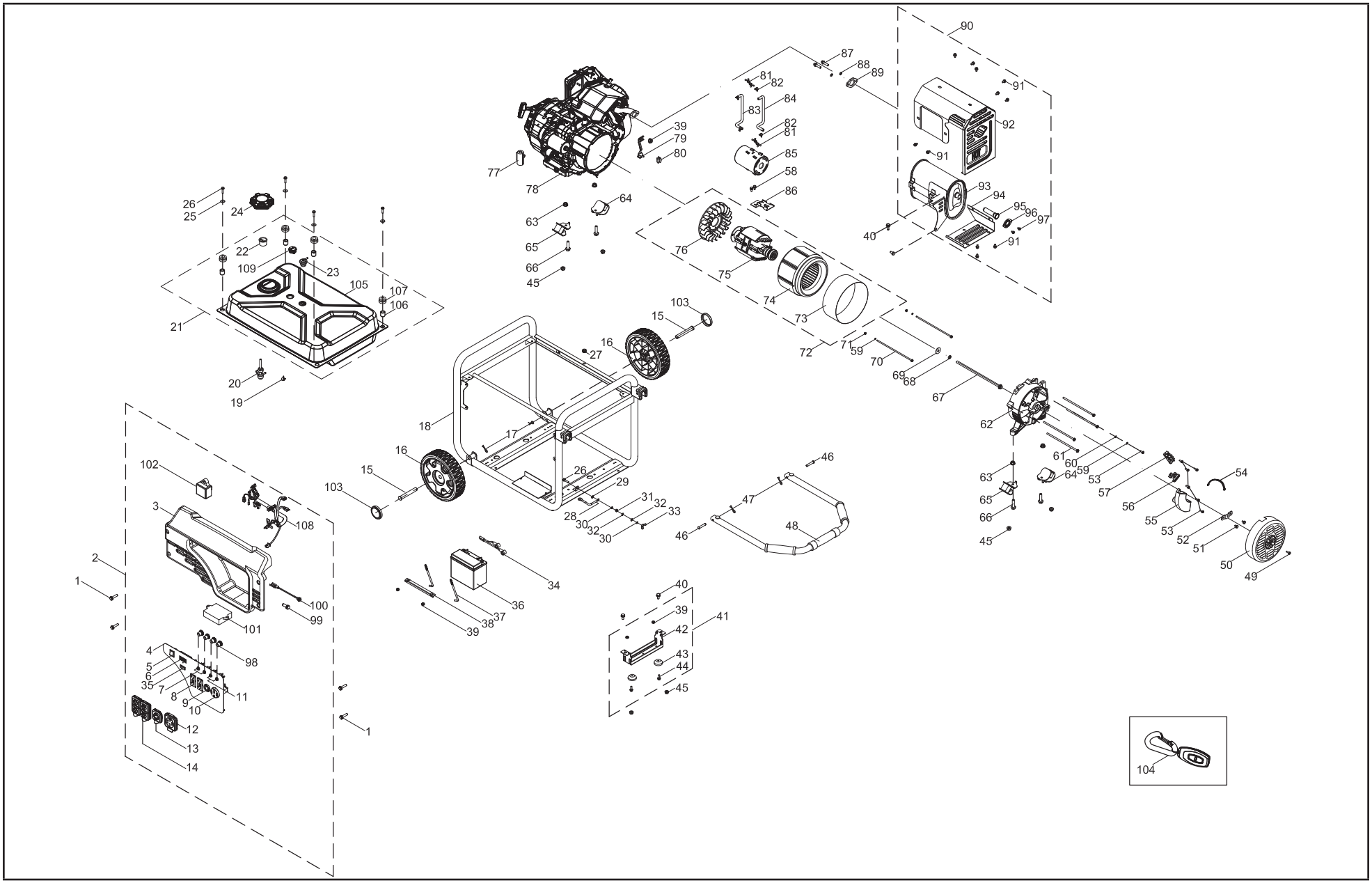

# GENERATOR PARTS LIST

| # | Part Number | Description | Qty. |
|---|---|---|---|
| 1 | 100011530-0002 | Flange Bolt M6x16 | 4 |
| 2 | 100095632-0001 | Panel Assembly | 1 |
| 3 | 100019844 | Control Panel Housing | 1 |
| 4 | 100086301 | Control Panel | 1 |
| 5 | 100019771-0001 | Switch, Engine | 1 |
| 6 | 100019890 | Intelligauge, VFT | 1 |
| 7 | 100019754 | 20Amp Circuit Breaker, Push Button | 2 |
| 8 | 100052461-0001 | Receptacle GFCI 5-20R, Duplex | 2 |
| 9 | 100020021 | Receptacle L14-30R | 1 |
| 10 | 100020022 | Receptacle 14-50R | 1 |
| 11 | 100019751 | 30Amp Circuit Breaker, Push Button | 2 |
| 12 | 100088266 | Receptacle Cover 14-50R | 1 |
| 13 | 100088267 | Receptacle Cover L14-30R | 1 |
| 14 | 100088270 | Receptacle Cover GFCI 5-20R, Duplex | 2 |
| 15 | 100011064-0001 | Pin Roll Ø16×100 | 2 |
| 16 | 100163346-0001 | 9.5 In. Wheel, Yellow | 2 |
| 17 | 100023414-0002 | R-pin, R8 | 2 |
| 18 | 100715778-0001 | Frame - Ø32, 744 × 528 × 563 | 1 |
| 19 | 100005138 | Clamp, Spring Ø9.5 × 8 | 1 |
| 20 | 100021153 | Fuel Valve | 1 |
| 21 | 100718429-0001 | Fuel Tank Assembly, 21.5 L, Yellow | 1 |
| 22 | 100718433 | Fuel Level Filter Assembly | 1 |
| 23 | 100008968 | Reversal Valve | 1 |
| 24 | 100142004 | Fuel Tank Cap | 1 |
| 25 | 100010439-0002 | Washer Ø6.5 × Ø25 × 2 | 4 |
| 26 | 100011268-0003 | Flange Bolt M6 × 25 | 5 |
| 27 | 100009075 | Rubber Damper | 1 |
| 28 | 100009983 | Grounding Line | 1 |
| 29 | 100011025-0001 | Lock Washer Ø6, Toothed | 1 |
| 30 | 100010886-0004 | Spring Washer Ø6 | 2 |

| # | Part Number | Description | Qty. |
|---|---|---|---|
| 31 | 100011421-0003 | Flange Nut M6 | 1 |
| 32 | 100010920-0002 | Flat Washer Ø6 | 2 |
| 33 | 100010828-0002 | Butterfly Type Nut M6 | 1 |
| 34 | 100712241 | Battery Connecting Wire | 1 |
| 35 | 100096134-0001 | Switch, Battery | 1 |
| 36 | 100021409 | Battery, 12V 14Ah | 1 |
| 37 | 100021362 | Fixing Bolt, Battery | 2 |
| 38 | 100021372-0017 | Pressing Plate, Battery, 184 mm | 1 |
| 39 | 100011452-0003 | Lock Nut M6, Flange | 5 |
| 40 | 100011311-0005 | Flange Bolt M8×16 | 4 |
| 41 | 100020981-0004 | Support Leg Assembly, 80 mm | 1 |
| 42 | 100020665-0001 | Support Leg | 1 |
| 43 | 100021015 | Vibration Mount | 2 |
| 44 | 100011265-0003 | Flange Bolt M6 × 18 | 2 |
| 45 | 100011453-0003 | Lock Nut M8, Flange | 6 |
| 46 | 100011049-0001 | Pin Roll Ø8 × 45 | 2 |
| 47 | 100023415-0001 | R-pin, R5 | 2 |
| 48 | 100020954-0001 | Handle Assembly | 1 |
| 49 | 100011570-0001 | Big Flange Bolt M6 × 12 | 1 |
| 50 | 100018662-0001 | Generator End Cover | 1 |
| 51 | 100011250-0002 | Flange Bolt M5 × 14 | 2 |
| 52 | 100020167 | Support, End Cover | 1 |
| 53 | 100011252-0001 | Flange Bolt M5 × 18 | 7 |
| 54 | 100000563 | Cable Ties, L=85 mm | 1 |
| 55 | 100715784 | AVR | 1 |
| 56 | 100018595 | Carbon Brush Assembly | 1 |
| 57 | 100018701 | Terminal Block | 1 |
| 58 | 100011261-0004 | Flange Bolt M6 × 12 | 2 |
| 59 | 100010885-0004 | Spring Washer Ø5 | 3 |
| 60 | 100010919-0002 | Flat Washer Ø5 | 1 |

## GENERATOR PARTS LIST

| # | Part Number | Description | Qty. |
|---|---|---|---|
| **61** | 100011304-0002 | Flange Bolt M6 × 194 | 4 |
| **62** | 100018572 | End Housing | 1 |
| **63** | 100011456-0003 | Flange Nut M10 × 1.25 | 4 |
| **64** | 100068992 | Vibration Mount 1, Frame | 2 |
| **65** | 100031984 | Vibration Mount 2, Frame | 2 |
| **66** | 100011381-0002 | Flange Bolt M10 × 1.25 × 40 | 4 |
| **67** | 100033045-0001 | Flange Bolt M10 × 1.25 × 280 | 1 |
| **68** | 100010888-0002 | Spring Washer Ø10 | 1 |
| **69** | 100010905-0001 | Washer Ø10 | 1 |
| **70** | 100031927-0001 | Flange Bolt M5 × 225 | 2 |
| **71** | 100011419-0001 | Flange Nut M5 | 2 |
| **72** | 100091342 | Alternator Assembly, Al, Ø204 × 155 mm | 1 |
| **73** | 100091343-0001 | Stator Cover, 147.5 mm | 1 |
| **74** | 100091341 | Stator Assembly, Al, Ø204 × 155 mm | 1 |
| **75** | 100091340 | Rotor Assembly, Al, Ø119 × 155 mm | 1 |
| **76** | 100007025 | Cooling Fan | 1 |
| **77** | 100000657 | Clip, Wire | 1 |
| **78** | 1ZC7DFB20 | Engine, 420cc | 1 |
| **79** | 100021039 | Holder, Air Cleaner | 1 |
| **80** | 100018704 | Rubber Plug | 1 |
| **81** | 100000658 | Wire Holder | 2 |
| **82** | 100005148 | Band Clamp, Ø8 | 2 |
| **83** | 100006138 | Connection Tube Assembly 1 | 1 |
| **84** | 100087746 | Connection Tube | 1 |
| **85** | 100008945 | Carbon Canister, 650 cc | 1 |
| **86** | 100008675-0001 | Holder, Carbon Canister | 1 |
| **87** | 100011553-0001 | Flange Bolt M8 × 32 | 2 |
| **88** | 100010887-0004 | Spring Washer Ø8 | 2 |
| **89** | 100006938 | Gasket, Exhaust Pipe | 1 |
| **90** | 100006208-0001 | Exhaust Muffler Assembly | 1 |
| **91** | 100011260-0004 | Flange Bolt M6 × 10 | 11 |
| **92** | 100127251 | Muffler Cover | 1 |

| # | Part Number | Description | Qty. |
|---|---|---|---|
| **93** | 100006497 | Muffler | 1 |
| **94** | 100006876 | Side Plate 2, Muffler Cover | 1 |
| **95** | 100006594 | Spark Arrester Assembly | 1 |
| **96** | 100006999 | Plate, Spark Arrester | 1 |
| **97** | 100011247-0003 | Flange Bolt M5 × 8 | 2 |
| **98** | 100120180 | Cover, Push Button Circuit Breaker | 4 |
| **99** | 100021445 | Remote Reset Indicator | 1 |
| **100** | 100021446 | Remote Reset Button | 1 |
| **101** | 100715813 | Remote Control Module | 1 |
| **102** | 100021434 | Charger Module | 1 |
| **103** | 100712243-0001 | Wheel Hub Cap, Yellow | 2 |
| **104** | 100095629 | Remote Control | 1 |
| **105** | 100145529-0001 | Fuel Tank, 21.5 L | 1 |
| **106** | 100021118 | Bushing, Ø12 × Ø9 × 13 | 4 |
| **107** | 100032369 | Vibration Mounting, Fuel Tank | 4 |
| **108** | 100716260 | Wire Harness | 1 |
| **109** | 100718432 | Fuel Gauge | 1 |

# ENGINE PARTS DIAGRAM

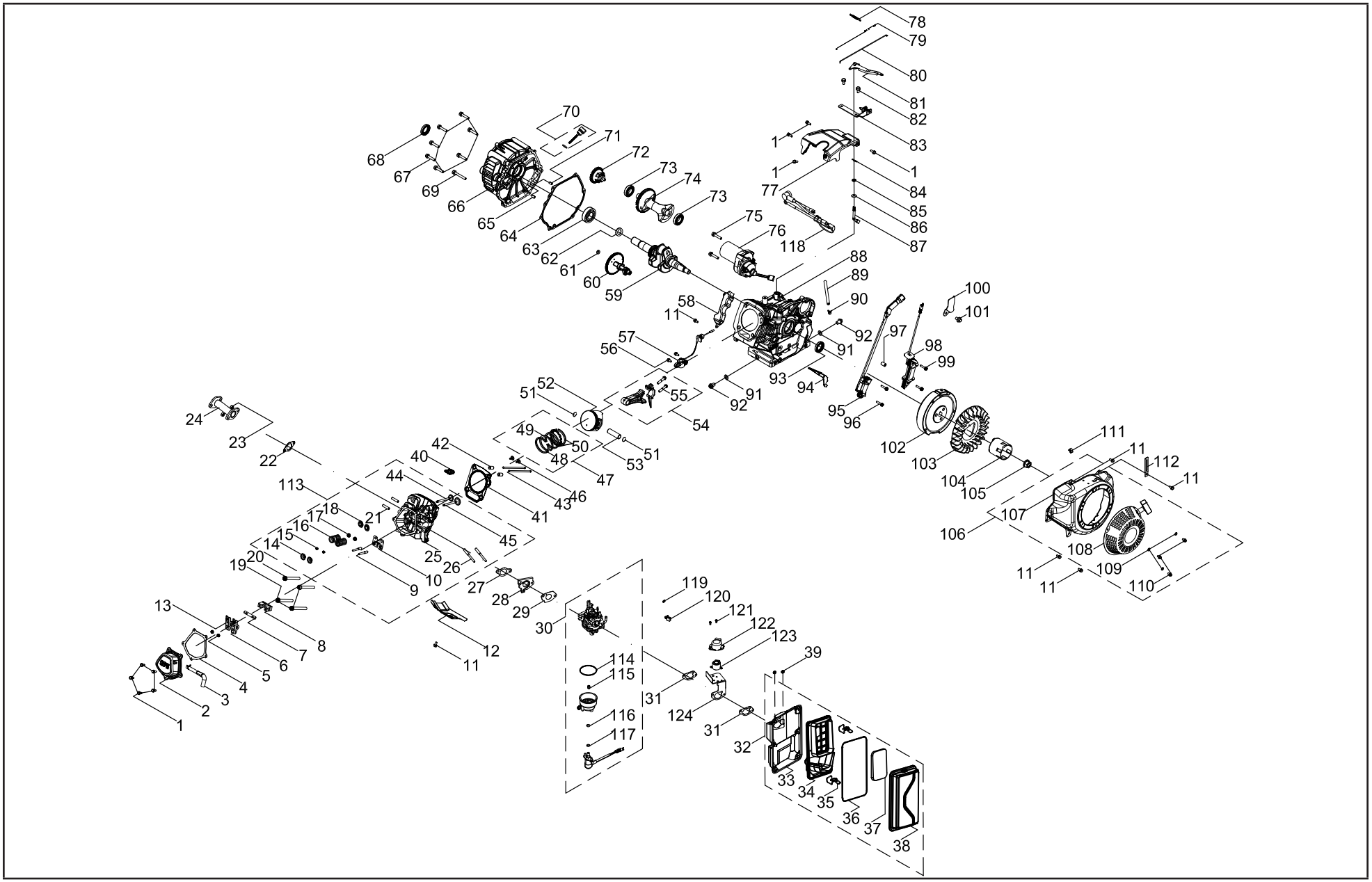

# ENGINE PARTS LIST

| # | Part Number | Description | Qty. |
|---|---|---|---|
| 1 | 100011264-0003 | Flange Bolt M6 × 16, GB5789 | 9 |
| 2 | 100002337 | Cylinder Head Cover (CPE) | 1 |
| 3 | 100031973 | Breather Tube | 1 |
| 4 | 100010186 | Gasket, Cylinder Head Cover | 1 |
| 5 | 100011463-0002 | Flange Nut M6 | 2 |
| 6 | 100004435 | Rocker Arm Assembly, Intake | 1 |
| 7 | 100004514 | Shaft, Rocker Arm | 1 |
| 8 | 100004508 | Retainer, Rocker Arm | 1 |
| 9 | 100004505 | Bolt, Rocker Arm | 2 |
| 10 | 100004480 | Guide Plate, Push Rod | 1 |
| 11 | 100011261-0004 | Flange Bolt M6 × 12 | 6 |
| 12 | 100007115 | Air Guide, Lower | 1 |
| 13 | 100004504 | Rocker Arm Assembly, Exhaust | 1 |
| 14 | 100004516 | Valve Spring Seat, 182F | 2 |
| 15 | 100004576 | Valve Collet | 4 |
| 16 | 100004574 | Spring Valve | 2 |
| 17 | 100004602 | Oil Seal, Valve | 2 |
| 18 | 100004575 | Valve Spring Seat, 173F | 2 |
| 19 | 100002470 | Flange Bolt M10 × 1.25 × 87 | 3 |
| 20 | 100002469 | Flange Bolt M10 × 1.25 × 65 | 1 |
| 21 | 100010389 | Stud Bolt M8 × 35 | 2 |
| 22 | 100006940 | Gasket, Exhaust Pipe | 1 |
| 23 | 100011422-0004 | Flange Nut M8 | 2 |
| 24 | 100006993 | Exhaust Pipe | 1 |
| 25 | 100002418 | Cylinder Head | 1 |
| 26 | 100010373 | Stud Bolt M6-8 × 110 | 2 |
| 27 | 100005550 | Gasket, Insulator | 1 |
| 28 | 100005588 | Insulator, Carburetor | 1 |
| 29 | 100005910 | Gasket, Carburetor | 1 |
| 30 | 100094771-0001 | Carburetor | 1 |

| # | Part Number | Description | Qty. |
|---|---|---|---|
| 31 | 100005955 | Gasket, Air Filter Base, 173F | 2 |
| 32 | 100004747 | Air Filter Assembly | 1 |
| 33 | 100005024 | Air Filter Base | 1 |
| 34 | 100004878 | Air Filter Separator | 1 |
| 35 | 100004895 | Air Filter Clip | 2 |
| 36 | 100004798 | Gasket, Air Filter Cover, 173F-2 | 1 |
| 37 | 100004781 | Air Filter Element | 1 |
| 38 | 100004874 | Air Filter Cover | 1 |
| 39 | 100011452-0003 | Lock Nut M6, Flange | 2 |
| 40 | 100009378 | Spark Plug (F6RTC) | 1 |
| 41 | 100010228 | Gasket, Cylinder Head | 1 |
| 42 | 100010562 | Dowel Pin Ø12 × 20 | 2 |
| 43 | 100004413 | Push Rod | 2 |
| 44 | 100004559 | Valve Exhaust | 1 |
| 45 | 100004539 | Valve Intake | 1 |
| 46 | 100004268 | Lifter, Valve | 2 |
| 47 | 100003264 | Piston Ring Set | 1 |
| 48 | 100003167 | 1st Piston Ring | 1 |
| 49 | 100003209 | 2nd Piston Ring | 1 |
| 50 | 100003294 | Oil Ring | 1 |
| 51 | 100003225 | Circlip | 2 |
| 52 | 100003100 | Piston | 1 |
| 53 | 100003131 | Wrist Pin | 1 |
| 54 | 100003458 | Connecting Rod | 1 |
| 55 | 100003432 | Bolt, Connecting Rod | 2 |
| 56 | 100011217-0002 | Flange Bolt M6 × 16 | 2 |
| 57 | 100010037 | Oil Level Sensor | 1 |
| 58 | 100007116 | Shroud 2 | 1 |
| 59 | 100003952 | Crankshaft | 1 |
| 60 | 100004319 | Camshaft | 1 |

# ENGINE PARTS LIST

| # | Part Number | Description | Qty. |
|---|---|---|---|
| 61 | 100010521-0001 | Washer Ø16.2 × Ø24 × 0.3 | 1 |
| 62 | 100010497 | Washer Ø35 × Ø42 × 0.3 | 1 |
| 63 | 100010789 | Bearing TM6207E / P64 | 1 |
| 64 | 100010162 | Gasket, Crankcase Cover | 1 |
| 65 | 100010553 | Dowel Pin Ø9 × 12 | 1 |
| 66 | 100003042 | Cover, Crankcase | 1 |
| 67 | 100011324-0001 | Flange Bolt M8 × 38 | 7 |
| 68 | 100017653 | Oil Seal Ø35 × Ø52 × 7, Spiral Grain | 1 |
| 69 | 100011329-0001 | Flange Bolt M8 × 45 | 1 |
| 70 | 100032064-0001 | Oil Dipstick Assembly | 1 |
| 71 | 100010544 | Dowel Pin Ø7 × 14 | 1 |
| 72 | 100008305 | Gear, Governor | 1 |
| 73 | 100010742 | Bearing TM6202 / P63 | 2 |
| 74 | 100003999 | Balance Shaft | 1 |
| 75 | 100009851 | Flange Bolt | 2 |
| 76 | 100009696 | Electric Starter | 1 |
| 77 | 100002445 | Cylinder Head Shield | 1 |
| 78 | 100007817 | Spring, Governor | 1 |
| 79 | 100007910 | Spring, Throttle Return | 1 |
| 80 | 100007936 | Rod, Governor | 1 |
| 81 | 100008400 | Arm, Governor | 1 |
| 82 | 100011309-0002 | Flange Bolt M8 × 14 | 2 |
| 83 | 100008060 | Control Assembly | 1 |
| 84 | 100007989 | Pin, Shaft | 1 |
| 85 | 100017631 | Oil Seal Ø8 × Ø14 × 4 | 1 |
| 86 | 100010518-0001 | Washer Ø8 × Ø20 × 0.8 | 1 |
| 87 | 100007980 | Shaft, Governor Arm | 1 |
| 88 | 100002782 | Crankcase | 1 |
| 89 | 100017834 | Pipe, Fuel, Ø4 × Ø10 × 175 | 1 |
| 90 | 100005138 | Clamp Ø9.5 × 8 | 1 |
| 91 | 100010467 | Washer Ø12 × Ø20 × 2 | 2 |
| 92 | 100010275 | Drain Bolt, M12 × 1.5 × 15 | 2 |

| # | Part Number | Description | Qty. |
|---|---|---|---|
| 93 | 100017649 | Oil Seal Ø35 × Ø52 × 7 | 1 |
| 94 | 100007117 | Shroud 3 | 1 |
| 95 | 100009338 | Ignition Module | 1 |
| 96 | 100009362 | Bolt M6 × 28, Ignition | 2 |
| 97 | 100004222 | Bush Ø8 × Ø12 × 6 | 1 |
| 98 | 100009405 | Charge Coil | 1 |
| 99 | 100011270-0002 | Flange Bolt M6 × 30 | 2 |
| 100 | 100009463 | Pressing Plate | 1 |
| 101 | 100011213-0001 | Flange Bolt M6 × 8 | 1 |
| 102 | 100009572 | Flywheel | 1 |
| 103 | 100007043 | Cooling Fan | 1 |
| 104 | 100007562 | Pulley, Starter | 1 |
| 105 | 100011460-0001 | Flange Nut M16 × 1.5 | 1 |
| 106 | 100718428-0001 | Recoil Starter Assembly | 1 |
| 107 | 100007583-0003 | Fan Cover, Yellow | 1 |
| 108 | 100715836-0001 | Recoil Starter | 1 |
| 109 | 100010894-0001 | Washer Ø6 | 3 |
| 110 | 100011528-0004 | Flange Bolt M6 × 10 | 3 |
| 111 | 100000667 | Clamp Ø8 × 8 | 1 |
| 112 | 100000655 | Wire Clip B | 1 |
| 113 | 100127018 | Cylinder Head Assembly | 1 |
| 114 | 100085766 | Fuel Bowl O-Ring | 1 |
| 115 | 100089153 | Main Jet Standard | 1 |
| | 100155681 | Main Jet Altitude 1000-2000m | / |
| | 100062835 | Main Jet Altitude 2000-3000m | / |
| 116 | 100134226 | O-Ring, Solenoid Valve Base | 1 |
| 117 | 100134227 | O-Ring, Solenoid Valve | 1 |
| 118 | 100712240 | Cable - Battery | 1 |
| 119 | 100052405 | Spring | 1 |
| 120 | 100041167 | Clamp, Stepper Motor Guide | 1 |
| 121 | 100060638-0002 | Screw M4 × 8 | 2 |
| 122 | 100060473 | Cover, Stepper Motor | 1 |

## ENGINE PARTS LIST

| # | Part Number | Description | Qty. |
|---|---|---|---|
| **123** | 100061511 | Stepper Motor | 1 |
| **124** | 100009820 | Mounting Bracing Plate | 1 |
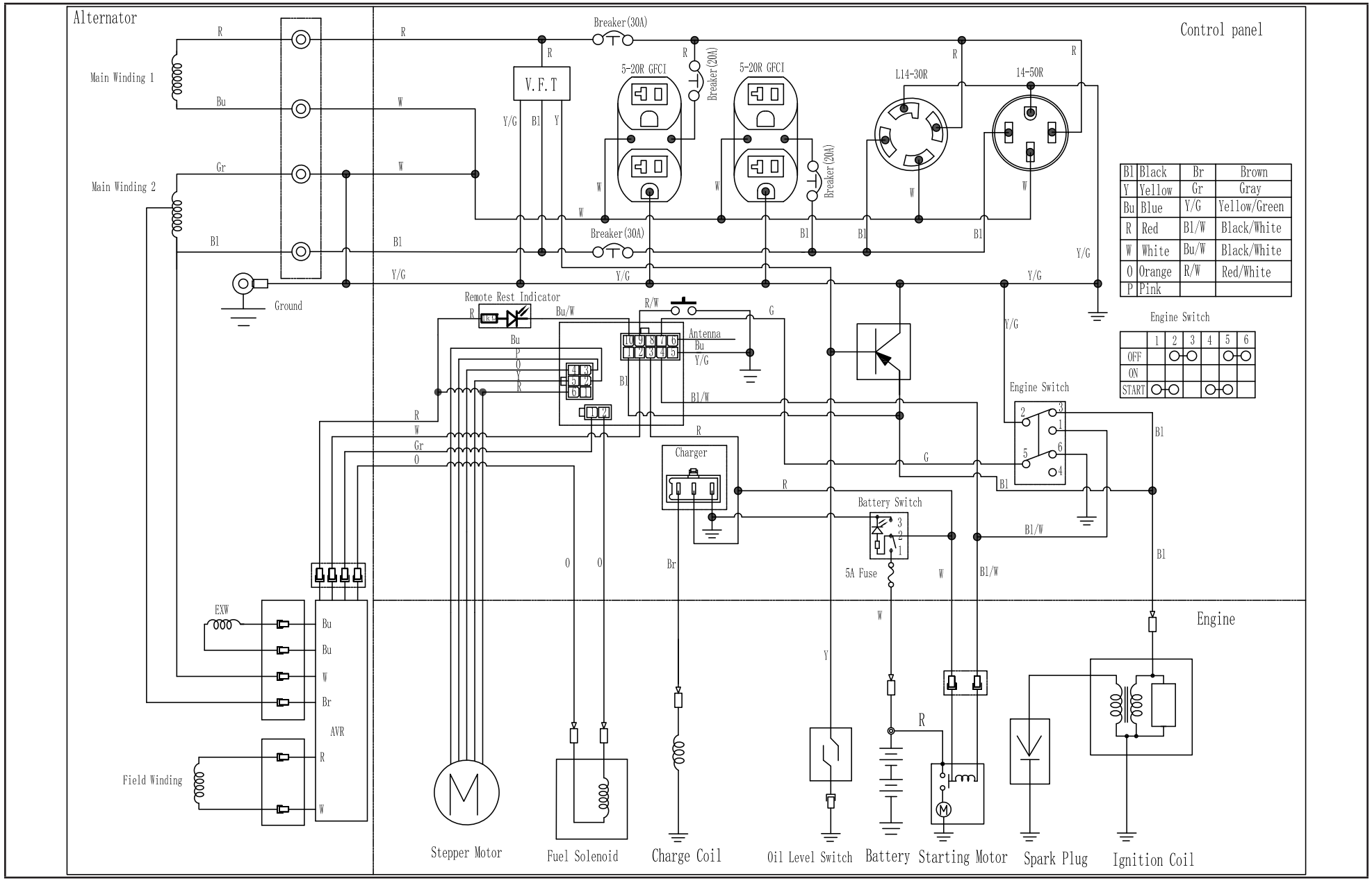
# WIRING DIAGRAM