0J6763

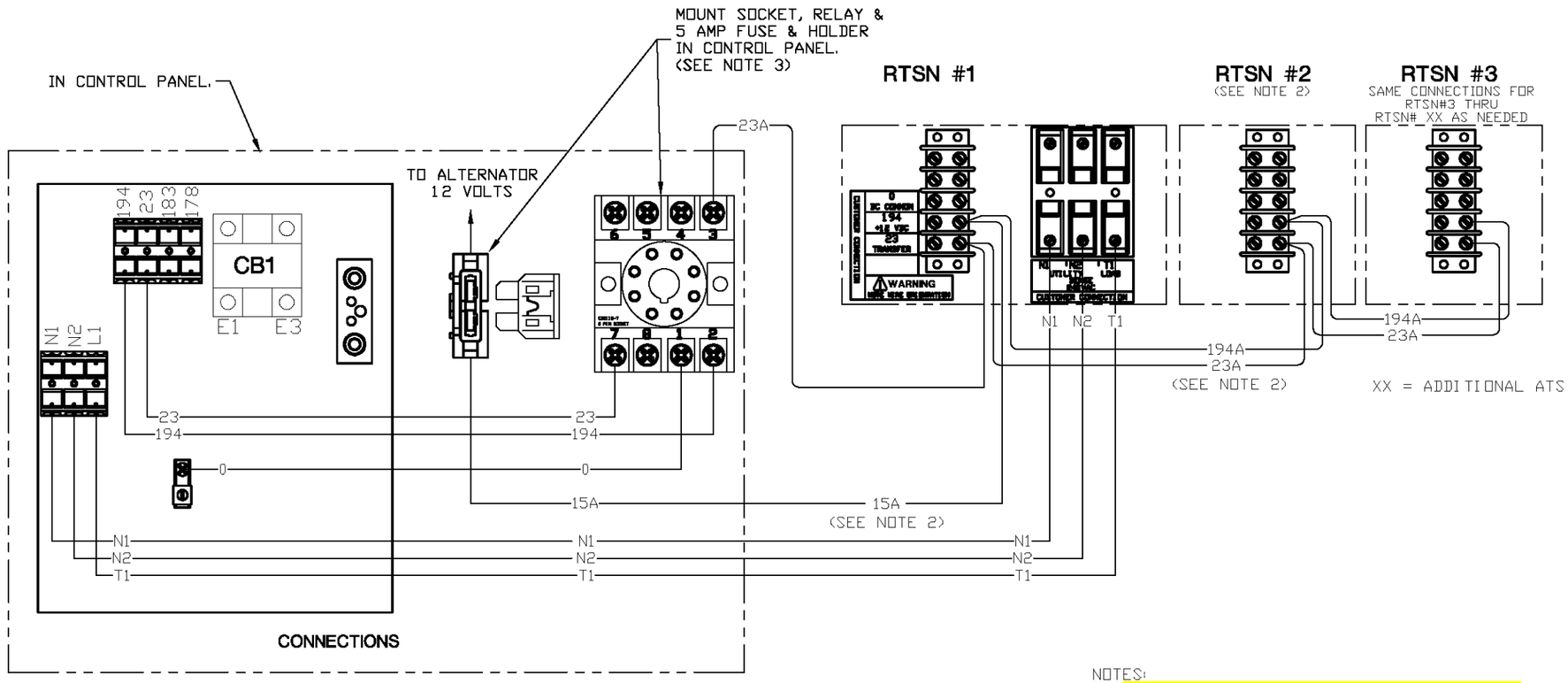

NOTES:

1. NO RELAY NEEDED FOR 2 TRANSFER SWITCHES, MORE THAN 2 REQUIRE A RELAY MOUNTED IN THE GENERATOR CONTROL PANEL.
2. WIRE 15A FROM TERMINAL 12 OF TB1 WILL CHANGE TO 194A AFTER TERMINATION IN RTSN (1) 194A WILL THEN CONTINUE TO THE LAST TRANSFER SWITCH.
3. RELAY - GENERAC PART NO. 0C3211E
   (12Vdc COIL, CONTACTS RATED 10A@ 240Vac)
   RELAY SOCKET - GENERAC PART NO. 0C3211G
   (8-PIN OCTAL, 300V)
   FUSE ATO TYPE 5 AMP (TAN) - GENERAC PART NO. 0E7403A
   FUSE HOLDER W/8" WIRE LOOP - GENERAC PART NO. 0E7402

-A-	RELEASED FOR PRODUCTION	

GENERAC POWER SYSTEMS OWNS THE COPYRIGHT OF THIS DRAWING WHICH IS SUPPLIED IN CONFIDENCE AND MUST NOT BE USED FOR ANY PURPOSE OTHER THAN FOR WHICH IT IS SUPPLIED WITHOUT THE EXPRESS WRITTEN CONSENT OF GENERAC POWER SYSTEMS.
© GENERAC POWER SYSTEMS 2011

EST. WT.
FINAL WT.

DO NOT SCALE
ALL DIMENSIONS AND TOLERANCING PER ASME Y14.5M-1994
UNLESS OTHERWISE SPECIFIED :
ALL XX DIM ---- ±0.4 MM
ALL XXX DIM --- ±0.4 MM
ALL XXXX DIM -- ±0.13 MM
ALL ANGLES ---- ±1°

DRAWING TITLE
INTERCONNECT DIAGRAM MUTIPLE RTSX

MATERIAL: N/A

DWN	MJB	DATE 8/16/11	MFG	N/A	DATE N/A
CHKD	JJJ	DATE 9/8/11	APPD	RP	DATE 9/9/11
RELEASED FOR PRODUCTION	BY J.JONAS				DATE 9/22/11

GENERAC POWER SYSTEMS
Waukesha
P.O. BOX 8
WAUKESHA, WIS. 53187

FILE NAME 0J6763-A.DWG
SIZE C
SCALE 1 = 1
FIRST USE
DWG NO. 0J6763
REV A